JURALCO

JURALCO EDGETEC INFINITY® BALUSTRADE SYSTEM

ISSUE 3-22 v1

Juralco Aluminium Building Products Ltd designs and distributes specialist aluminium joinery systems through a national network of franchised fabricators and agents. For more than 25 years we have been at the forefront of specialist aluminium door and window products suitable for New Zealand joinery and building methods. Our comprehensive product range includes security and insect screens, balustrades and gates, shutters and awnings, shower screens, wardrobe doors and organisers and internal doors. The Juralco Edgetec Infinity® Balustrade system is designed for Frameless Glass, from 12mm to 17.52mm, either Top or Faced fixed and for Residential or Commercial use. An Interlinking Top Rail (depending on Glass type) must be used. The system is extremely versatile and can be made in a range of configurations to suit most modern architectural requirements.

The Infinity Semi Frameless Glass system features heavy duty internal clamps at regular intervals all covered by continuous cover extrusions front and back, giving a streamlined minimal look. For Top or Face fixing.

- Juralco Edgetec Infinity® Balustrade System
- Glass Panels from 12mm Toughened Safety Glass to 17.5mm SentryGlas®
- Tested to NZ standard NZS4203 and NZS1170
- Conforms to NZS 4223.3.2016
- Top Interlinking Rail to conform to NZS 4223.3.2016
- Clamps spaced at 400mm - 500mm centres depending on the application and Glass type
- Simple installation. Allows horizontal and vertical glass adjustment.

Top Fix System + Interlinking Top Rail

Top Fix System + SentryGlas. Interlinking Top rail not required

Top Fix System + Interlinking Top Rail

Face Fix System + Interlinking Top Rail

Juralco Edgetec Infinity® Balustrade Patent #NZ 630364

Complies With AS/NZS 1170:2002, NZS 4223.3.2016, NZ Building Code B1, B2, F2, F4 and F9

For Domestic and Residential Occupancy types A, A Other and C3 and for Commercial Occupancy Types B, E, A Other and C3 Occupancy Types as per AS/NZ 1170.1.2002. Not suitable for Commercial C1/C2, C5 and D applications

Code	Type of Occupancy for part of the building or structure	Specific Uses	Glass
A	Domestic and Residential activities	All areas within or serving exclusively one dwelling including stairs, landings etc, but excluding external balconiesand edges of roofs.	Residential,12mm Toughened Glass, 15.2 mm Laminated or 13.52mm SentryGlas®
B, E	Offices and work areas not included elsewhere including storage areas.	Light access stairs and gangways not more than 600mm wide Fixed platforms, walkways, stairways and ladders for access Areas not susceptible to overcrowding in office and institutional buildings; also industrial and storage building.	Commercial,15mm Toughened Glass, 17.2 mm Laminated or or 17.52mm SentryGlas®
A Other, C3	Areas without obstacles for moving people and not susceptible to over crowding	Stairs, landings, external balconies, edges of roofs etc.	Residential or Commercial as detailed above

Note 1 **All for 12mm or 15mm Toughened, 15.2mm or 17.2mm Laminated and 13.52mm or 17.52mm SentryGlas® . All edges polished.**

Note 2 **Juralco Balustrade Systems building code compliance documentation requires all balustrade installations are to be completed in accordance with the requirements of our authorised installer certification.**

Note 3 **Frameless Glass Balustrades must conform to NZS 4223.3.2016**
See individual Layout pages for conformance details

masterspec partner
Section 4852JB

Note 4 **The Dulux powder coating warranty period is conditional upon the Balustrade being maintained in accordance with the Dulux 'Care and Maintenance Instructions'. See Page 5 for warnings concerning Coastal conditions.**
Contact your balustrade installer for a copy of the Care and Maintenance procedure.

Index

Juralco Aluminium Building Products Ltd (JABP)
Specifications for Juralco Edgetec Infinity® Balustrade System

1.Scope

- This specification details the documents the Juralco Edgetec Infinity® Balustrade System refers to in relation to the New Zealand Building Code, the manufacturer's documents, products used in the System, requirements in relation to fixing and surface finishing.

2. NZBC Compliance

- The Juralco Edgetec Infinity® Balustrade System has been reviewed by Lautrec Technology Group Ltd to demonstrate compliance with the structural requirements of the New Zealand Building Code and NZS 1170 : 2002 occupancy A, B, E ,A Other and C3, NZS 3604 Low, Medium, High, Very High and Extra High Wind Zones, to a maximum ULS wind load of 2.5kPa
- The Structural Engineering design includes the requirements of B1 Structure, B2 Durability, F2 Hazardous material and F4 Safety from falling, all from the Building Code.
- Verification Method B1 / VM1, B2/AS1, F4 / AS1
- All glass used in the Juralco Infinity® Balustrade System must conform to AS/NZS 2208. Complies with NZS 4223.3.2016
- Separation of dissimilar materials (as relates to B2 compliance) have been reviewed. For other combinations refer to NZS 3604:2011 Section 2.3.3 Separation and Section 4 Durability

3. Manufacturer's Documents

- The Juralco Edgetec Infinity® Balustrade System manual details all extrusions and components used for the fabrication and installation/fixing of the system.
- A Producer Statement 1(Design) is available.
  Copies of the above documents are available from:
  Juralco Aluminium Building Products Ltd
  48 Bruce McLaren Rd, Henderson, Auckland
  Phone 09 478 8018 Fax 09 478 7883 Email specify@juralco.co.nz
- Any deviation from the standard fabrication or installation/fixing must be accompanied by a site specific PS1 with site specific calculations and drawings

4. Products

- Only extrusions, components and hardware supplied by or specified by JABP may be used in the Juralco Edgetec Infinity® Balustrade System
- Aluminium extrusions, components and hardware – unless specified are manufactured to 6060 T5 specifications
- Stainless Steel components, hardware, fixings – all components to 304 or 316 grade
- Glass - all glass used in the Juralco Edgetec Infinity® Balustrade System must conform to the specifications as listed in the Juralco Edgetec Infinity® Balustrade System manual with each panel conforming to AS/NZS 2208 as confirmed by the Safety Stamp detailing the manufacturer's description and licence number.

5.Surface Finishing

- Juralco Aluminium Building Products Ltd is a Dulux Registered Applicator site, registration number 2101. JABP uses only Dulux branded powder coating materials
- Dulux Duralloy® powder coating systems are suitable for properties greater than 100m from high tide level AAMA 2603 performance. Residential buildings, 3 levels max. Warranty 10 yrs
- Dulux Duralloy Plus® powder coating systems are suitable for properties greater than 10m from high tide level. AAMA 2603 performance. Residential and Light commercial buildings, 3 levels max. Warranty 15 yrs
- Dulux Duratec® powder coating systems are suitable for properties greater than 10m from high tide level AAMA2603 and 2604 performance. All Residential and Commercial buildings. Warranty 25 yrs

6. Installation and Fixing

- The Juralco Edgetec Infinity® Balustrade System must only be installed in accordance with the Juralco Edgetec Infinity® Balustrade System manual
- Any deviation from that specified in the Juralco Edgetec Infinity® Balustrade System manual must only be in accordance with the site specific PS1 with site specific calculations and drawings listing the non standard details
- The Juralco Edgetec Infinity® Balustrade System must only be fabricated/installed by a Juralco approved fabricator
- Upon completion of the installation the fabricator must supply the Council with a PS3 (Construction)

Important information - Powder Coating systems.

Powdercoat Systems The new standard Dulux powder coating system used by Juralco is Duralloy Plus®. Also Duralloy® and Duratec®. All as per specs above. Juralco Powder coated prices are for Duralloy Plus® and Duralloy® (same pricing). Duratec® prices on application.

Attachment to structures A PVC Tape or similar material spacer must be used to separate powder coated aluminium items from all concrete and steel structures. Failure to do so can lead to the chemicals in the structure affecting the powder coating, leading to corrosion.

Swimming Pools The chlorinated water in swimming pools can cause the deterioration of powder coated surfaces, leading to corrosion of the underlying surface. It is recommended that Powder coated surfaces be 1200mm min from a pool.

Care The Dulux powder coating warranty period is conditional upon the surface being maintained in accordance with the Dulux 'Care and Maintenance Instructions'. Download from Dulux or refer to the back page of this manual.

Juralco Edgetec Infinity® Balustrade System
Typical Layouts - Face Fix

Edgetec Infinity® Glass Clamps
Face Fix + Interlinking Rail

Glass must have a minimum strength of 100Mpa. All edges polished

Residential & Domestic only
Occupancy types A, A Other and C3

For 12mm Toughened Glass
- **D max 500mm.**
- **BH max 1200mm**

For 15.2mm Toughened Laminated Glass
- **D max 500mm.**
- **BH max 1150mm**

Note: See individual Mounting pages for construction options

Max Tension load per Face fixing = 20kN

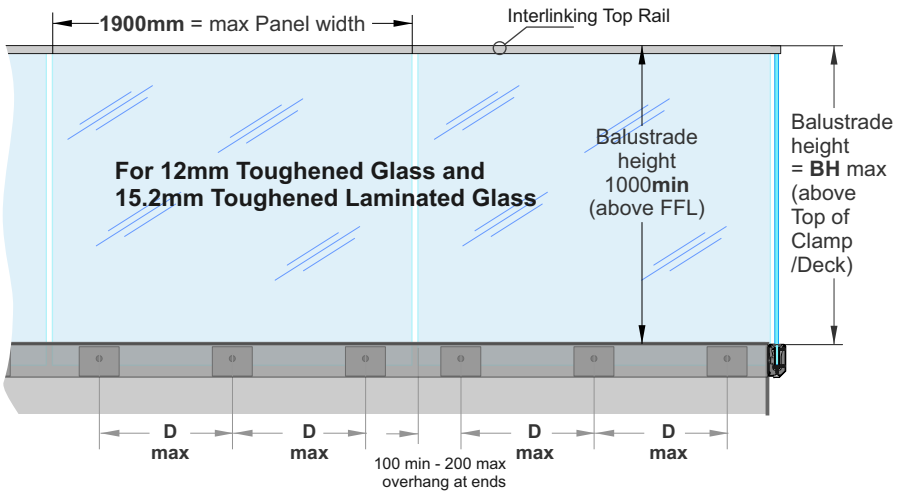

Exceeds the wind loading for all Wind Zones up to **and Including** **Very High Wind Zone** as set out in NZS 3604:2011

Refer to the Interlinking Top Rail page for conformance to NZS 4223.3.2016.

Edgetec Infinity® Glass Clamps
Face Fix + Interlinking Rail

Glass must have a minimum strength of 100Mpa. All edges polished

Commercial Occupancy types B, E, and C3 only

For 15mm Toughened Glass and 17.2mm Toughened Laminated Glass
- **D max 400mm**
- **BH max 1300mm**

Note: See individual Mounting pages for construction options

Max Tension load per Face fixing = 23kN

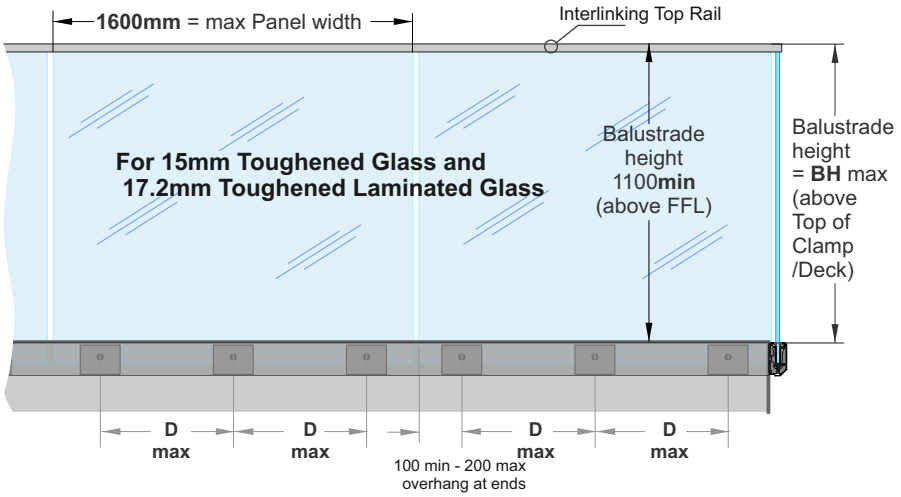

Exceeds the wind loading for all Wind Zones up to **and Including** **Extra High Wind Zone** as set out in NZS 3604:2011

Refer to the Interlinking Top Rail page for conformance to NZS 4223.3.2016.

Edgetec Infinity® Glass Clamps
Face Fix

POOL FENCING only

Glass must have a minimum strength of 100Mpa. All edges polished

Max Tension load per Face fixing = 27kN

Applies to Swimming Pools as of Jan 2017, complies with the Building Code clause F9 and section 162C of the Building Act.

Applies to Pool Fences not protecting a fall of 1.0m or more

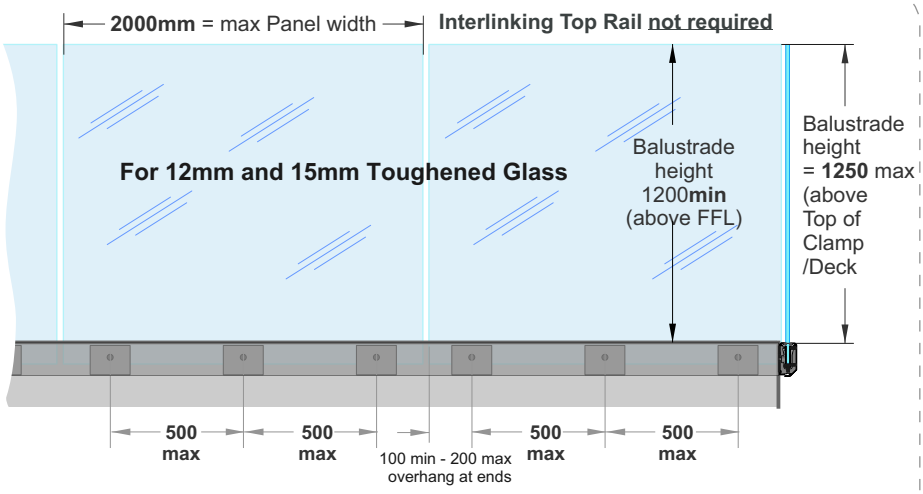

12mm Toughened - Up to and including Very High Wind Zone.	15mm Toughened - Up to and including Extra High Wind Zone

Juralco Edgetec Infinity® Balustrade System
Typical Layouts - Face Fix

Edgetec Infinity® Glass Clamps
Face Fix + Stiffener Brackets

Glass must have a minimum strength of 100Mpa. All edges polished

Residential & Domestic only
Occupancy types A, A Other and C3

For 15.2mm Toughened Laminated Glass

- **D max 500mm.**
- **BH max 1150mm**

For 13.52mm SentryGlas

- **D max 350mm.**
- **BH max 1050mm**

Note: See individual Mounting pages for construction options

Max Tension load per Face fixing = 20kN

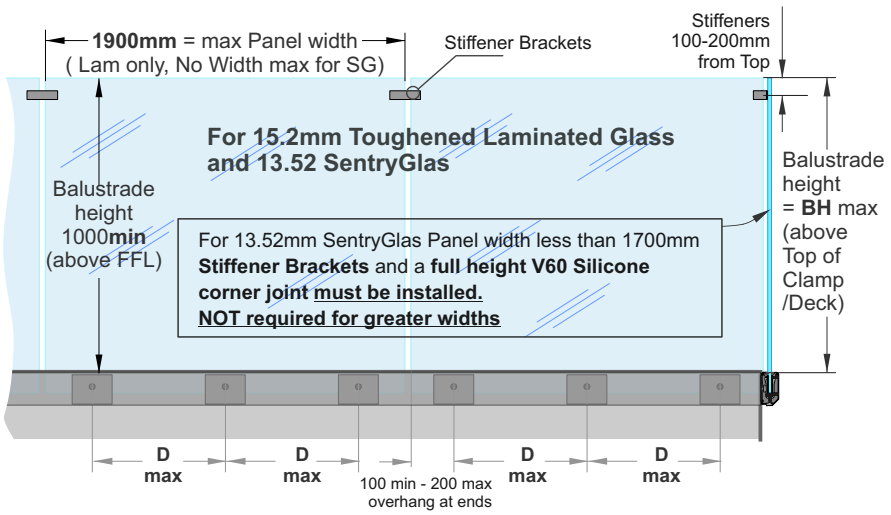

Exceeds the wind loading for all Wind Zones up to **and Including** **Very High Wind Zone** as set out in NZS 3604:2011

Refer to the Stiffener Bracket pages for conformance to NZS 4223.3.2016.

Edgetec Infinity® Glass Clamps
Face Fix + Stiffener Brackets

Glass must have a minimum strength of 100Mpa
All edges polished

Commercial Occupancy types B, E, and C3 only

For 17.2mm Toughened Laminated Glass

- **D max 400mm**
- **BH max 1300mm**

For 17.52mm SentryGlas

- **D max 350mm**
- **BH max 1200mm**

Note: See individual Mounting pages for construction options

Max Tension load per Face fixing = 23kN

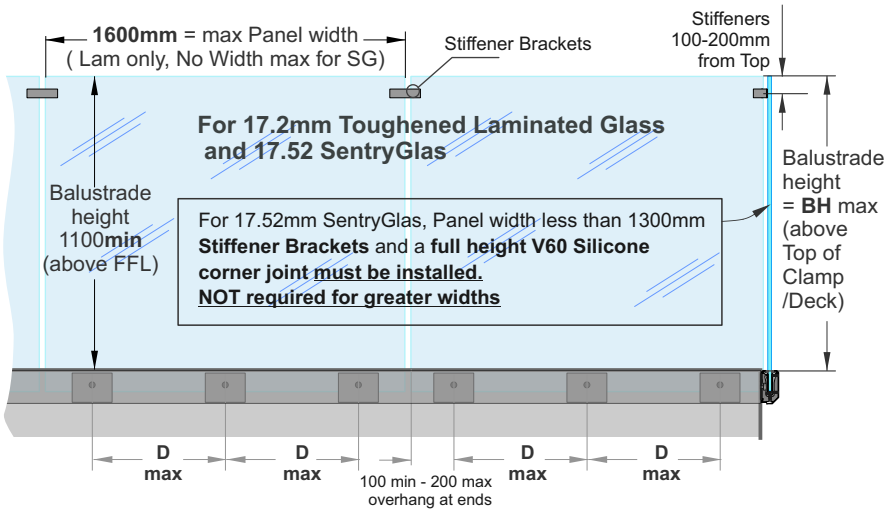

Exceeds the wind loading for all Wind Zones up to **and Including** **Extra High Wind Zone** as set out in NZS 3604:2011

Refer to the Stiffener Bracket pages for conformance to NZS 4223.3.2016.

SentryGlas® Glass Layers and Thickness Orientation

Glass Thickness (mm)	Inner Layer of Glass thickness (mm) Deckside	Interlayer thickness(mm) and Type	Outer Layer Glass thickness (mm)
13.52	6	1.52 SentryGlas®	6
17.52	8	1.52 SentryGlas®	8

Refers to previous page.
Laminated Glass Layers and Thickness Orientation

Glass Thickness (mm)	Inner Layer of Glass thickness (mm) Deckside	Interlayer thickness(mm) and Type	Outer Layer Glass thickness (mm)
15.2	8	1.2EVA	6
17.2	8	1.2EVA	8

Edgetec Infinity®
Stairs, Face Fix

Stair structure to be designed by others to resist Balustrade actions as per NZS1170.1 Table 3.3

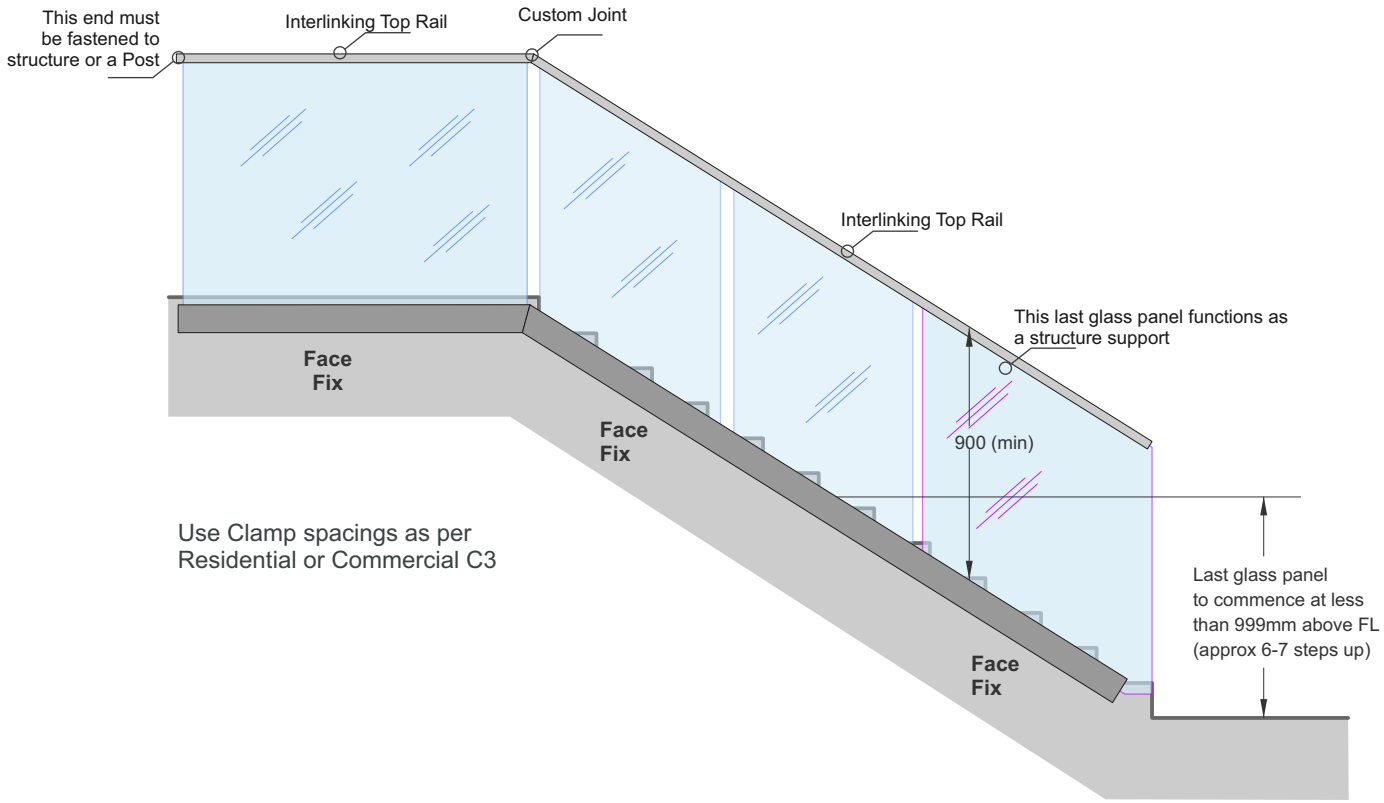

Edgetec Infinity®
Face Fix only
Stair Stringer Detail

Stair structure to be designed by others to resist Balustrade actions as per NZS1170.1 Table 3.3
For Internal use only, Residential Type A

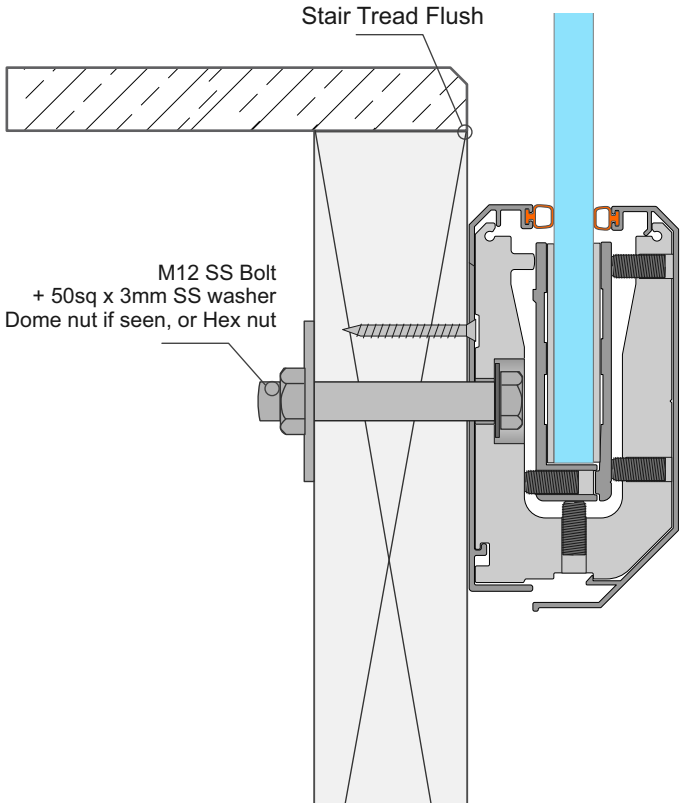

Juralco Edgetec Infinity® Balustrade System
Face Fix General

Edgetec Infinity®
Glass Clamp
Face Fix
(12mm Glass Shown)

The Balustrade Clamp comes as a kit;
Clamp Extrusion, Front and Rear Gasket Extrusions
Gaskets, Glass bottom Packer and all adjusting screws.
(M12 Fastener not included)

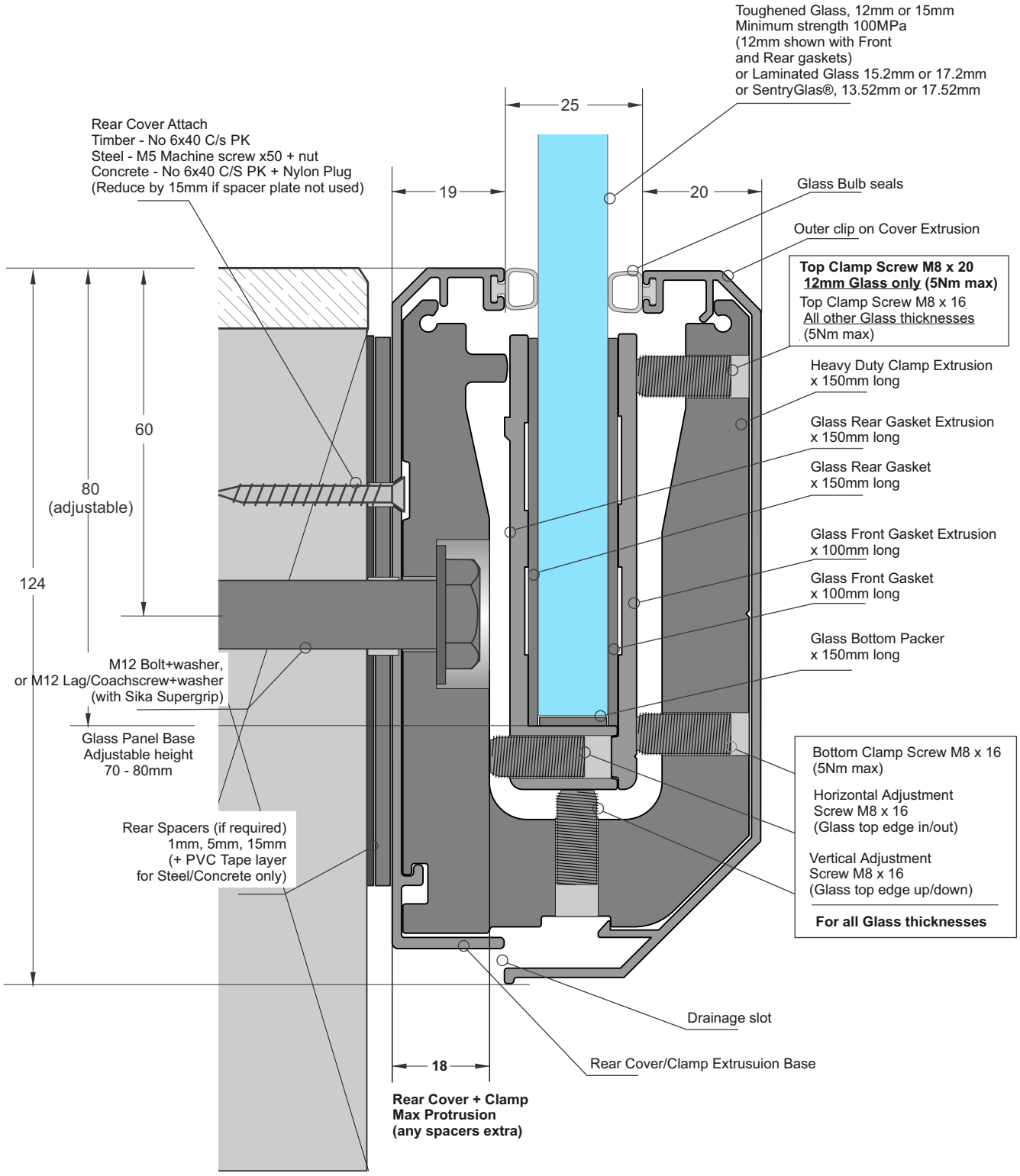

Elevation showing the Main Features

Juralco Edgetec Infinity® Balustrade System
Face Fix Components

Heavy Duty Clamp Extrusion
Part No JET/IB/CB
Face Fix

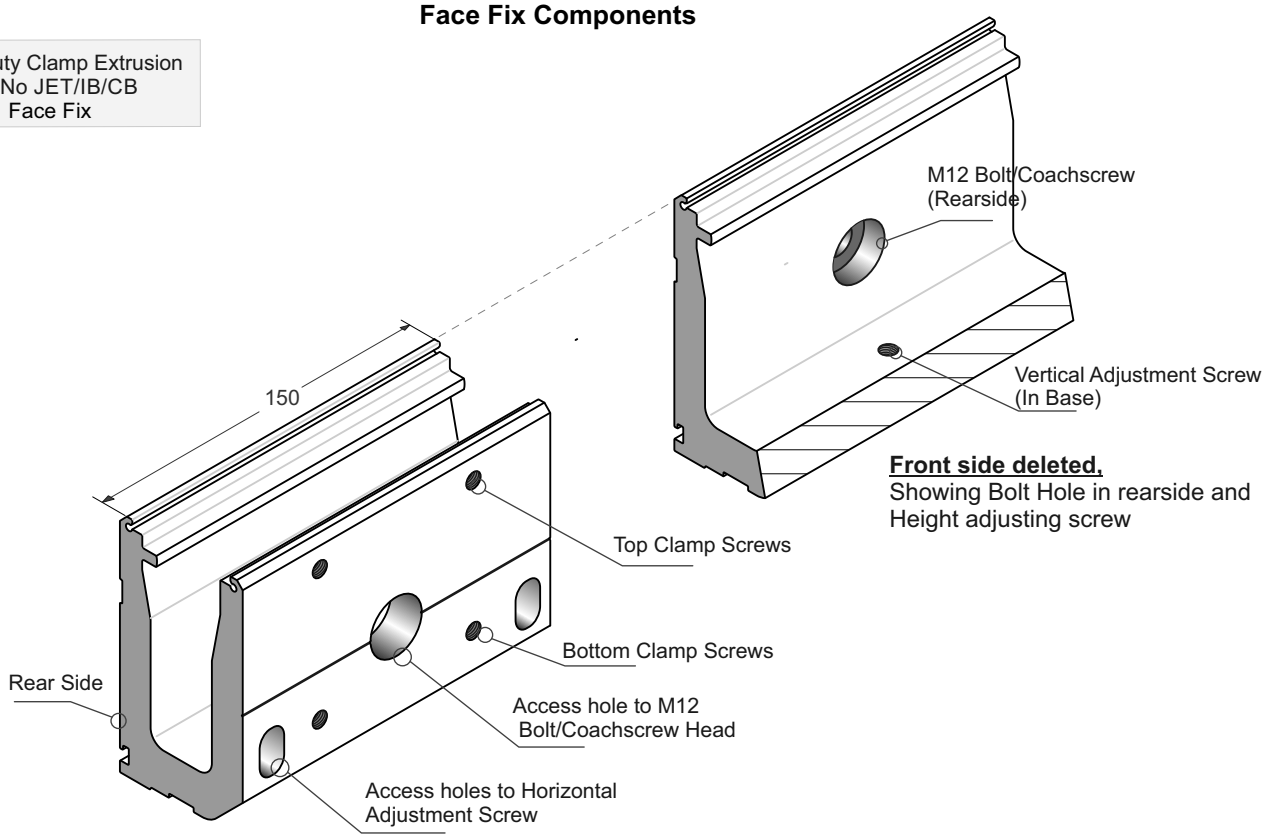

Front side deleted,
Showing Bolt Hole in rearside and
Height adjusting screw

Heavy Duty Clamp Extrusion
90deg Internal Corner
Part No JET/IB/INCNRBLK
Face Fix

Note: These corners are used only
to align the mitered Rear and Front cover corners.
They are not supplied with Glass Clamps
or adjusting screws

Heavy Duty Clamp Extrusion
90deg External Corner
Part No JET/IB/EXCNRBLK

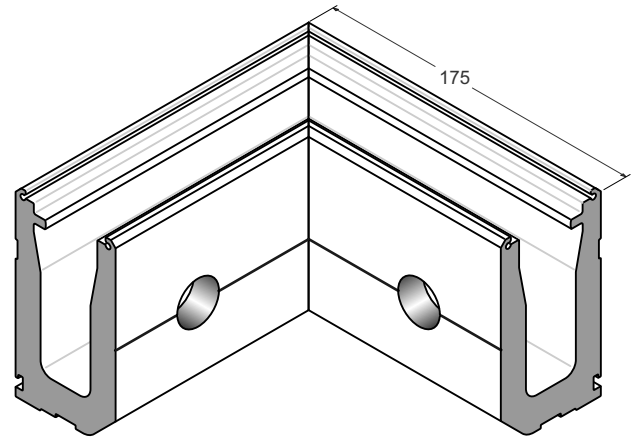

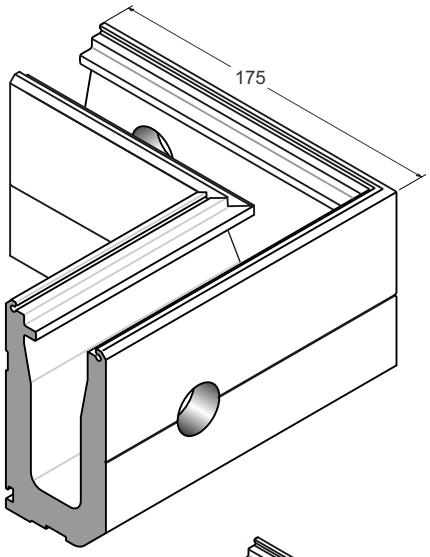

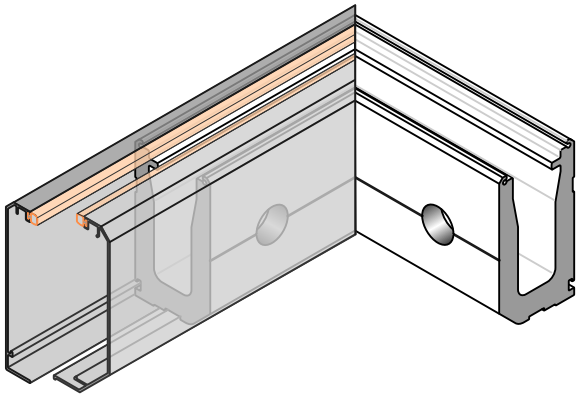

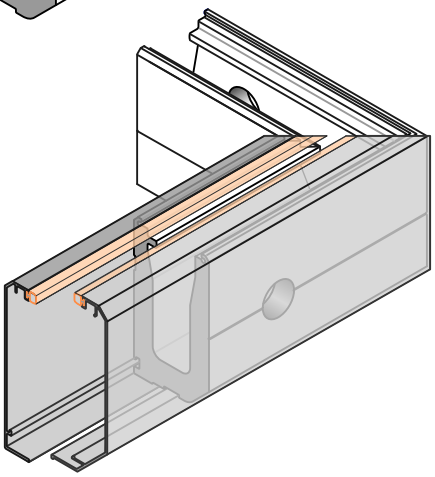

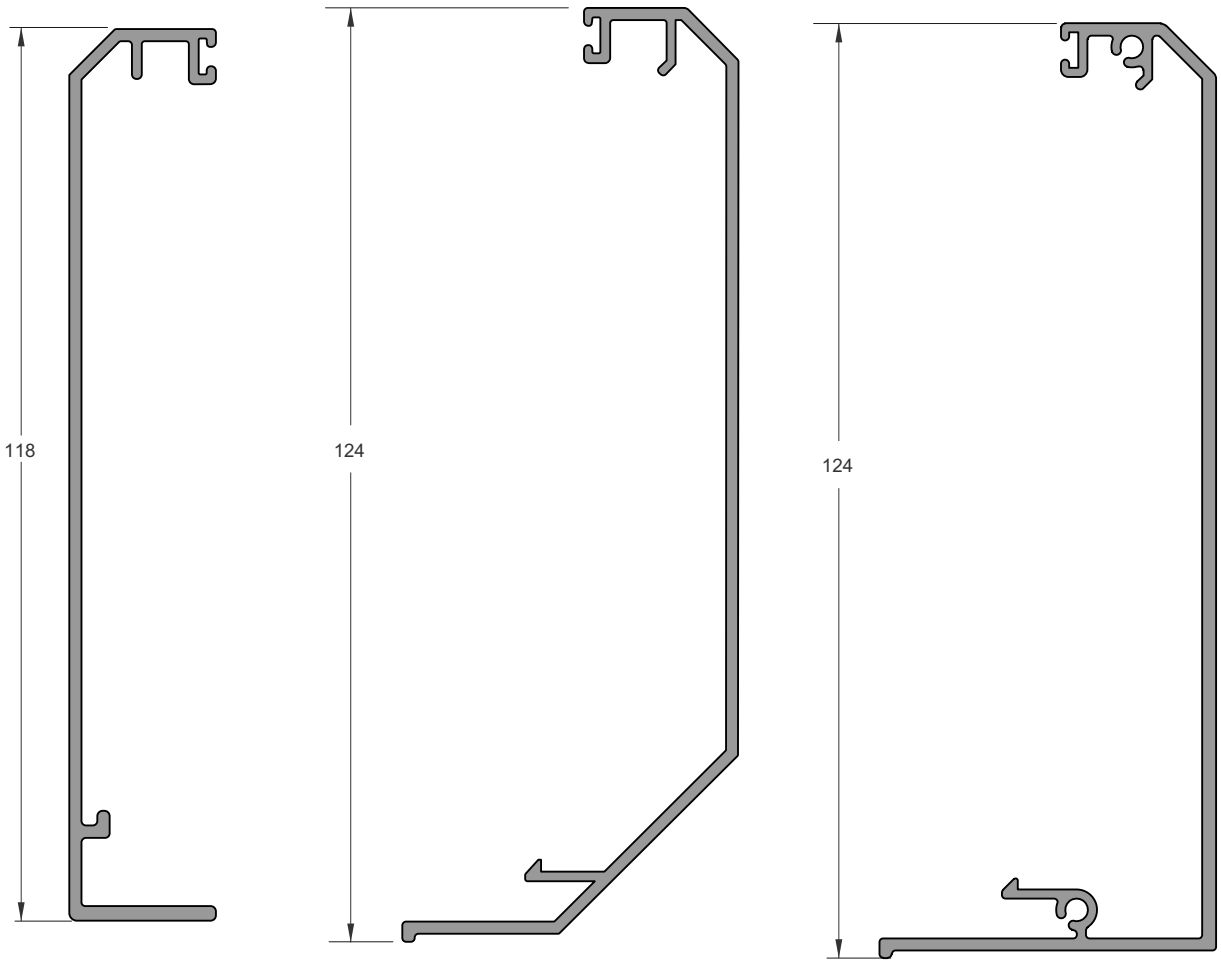

Rear Cover/clamp Base
JET/IB/IC

Outer Clip On Cover
JET/IB/OC

Flat Outer Clip On Cover
JET/IB/FOC

End Plate Fastening
with JET/IB/EPKIT
Face Fix

Note: Exactly the same procedure
for the Flat Cover

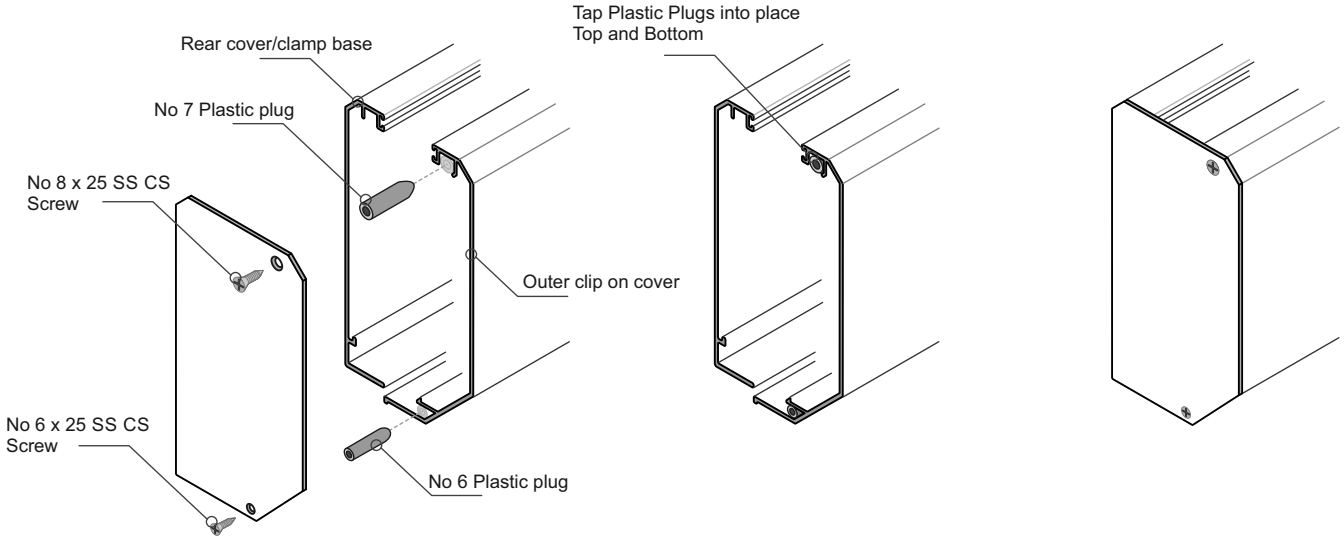

1 - EPKIT Components

2 - Plastic Plugs tapped
into place

3 - End Plate screwed
into place

Juralco Edgetec Infinity® Balustrade System
Face Fix Components

Extrusion End Plate
Part No JET/IB/EPKIT

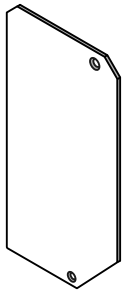

Kit Includes
No7 Plastic plug + 8g x 25 SS CS Screw
No 6 Plastic plug + 6g x 25 SS CS Screw

Flat Cover End Plate
Part No JET/IB/FEP

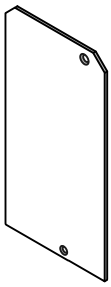

For Flat Outer Cover - Kit Includes
No7 Plastic plug + 8g x 25 SS CS Screw
No 6 Plastic plug + 6g x 25 SS CS Screw

Rear Spacer Plate
100 wide x 94 deep

Use only if required

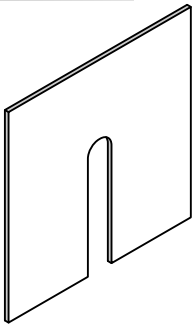

1mm thick Plate - Part No JET/IB/CSP/1.0
5mm thick Plate - Part No JET/IB/CSP/5.0

Glass Gasket Extrusions
Front and Rear

Front 100 wide, Part No JET/IB/GS/12
Rear 150 wide, Part No JET/IB/GS/15

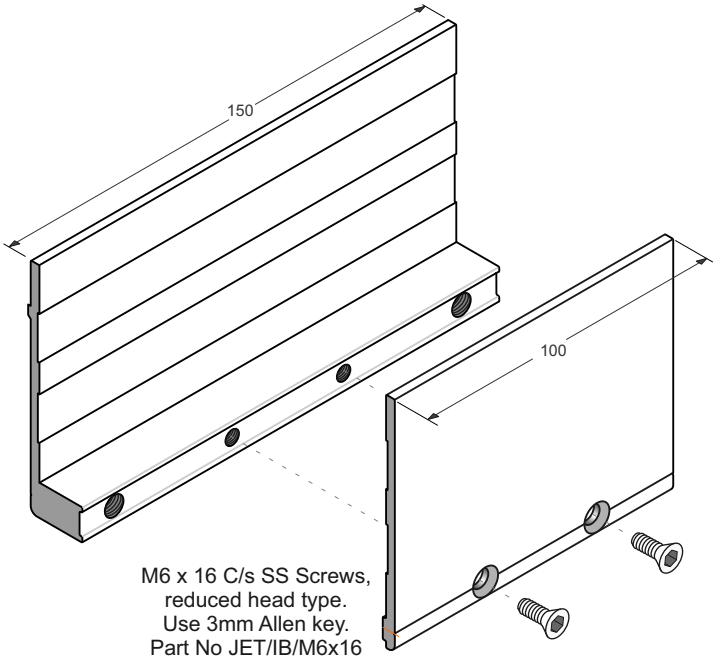

M6 x 16 C/s SS Screws,
reduced head type.
Use 3mm Allen key.
Part No JET/IB/M6x16

Rear Spacer Plate 15mm
Part No JET/IB/CSP/15

For use on Timber Decks

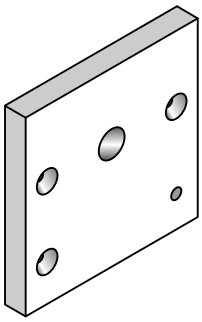

100 wide x 94 high x 15mm thick

Glass Bulb Seal
Part No JET/IB/CVRBLB250

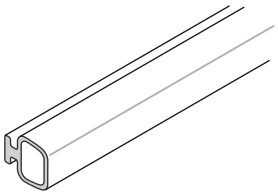

Glass Gaskets
1mm and 2mm

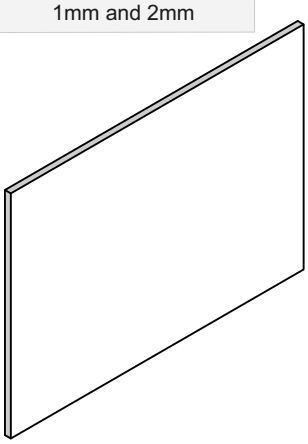

Gasket Schedule	
12mm Toughened	Use 2 x 2mm Gaskets
13.52mm SentryGlas	
15mm Toughened	Use 2 x 1mm Gaskets
15.2mm Laminated	
17.2mm Laminated	
17.52mm SentryGlas	

Gasket 2mm Thick	Front 100 wide, Part No JET/IB/GGF2 Rear 150 wide, Part No JET/IB/GGR2

Gasket 1mm Thick	Front 100 wide, Part No JET/IB/GGF1 Rear 150 wide, Part No JET/IB/GGR1

SIKA Supergrip 2hr
Part No JEC SUPERGRIP

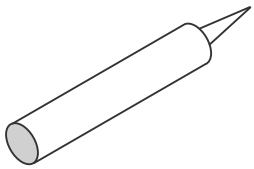

For All Coachscrews fixings

Rhodorsil V60 Clear Silicone
Part No H/RTV419098

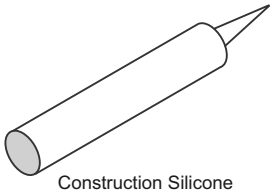

Construction Silicone

Approved Timber Construction Options
Face Fix into Double Joist

M12 SS Bolts or Threaded Rod - All Wind Zones
M12 SS Lagscrews - All Wind Zones
M12 SS Coachscrews - Up to and Incl Very High Wind Zone only
Note: All Lag/Coachscrews 90mm min Screw engagement into Joists

Approved Timber Construction Options
Face Fix into Triple Joist

M12 SS Bolts or Threaded Rod - All Wind Zones
M12 SS Coachscrews - All Wind Zones
Note: All Coachscrews 130mm min Screw engagement into Joists

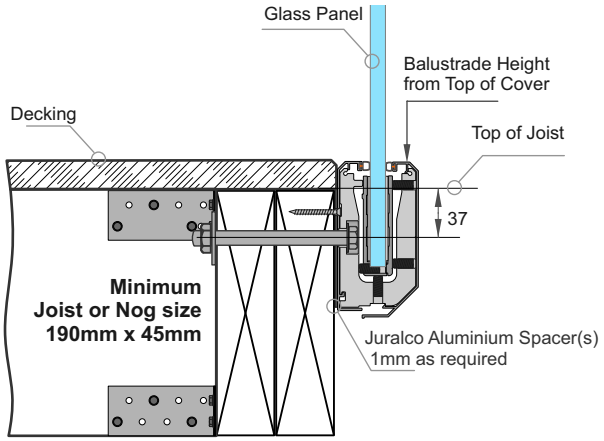

1 - Attach Directly to Double or Triple Joists using 1mm alignment Spacers

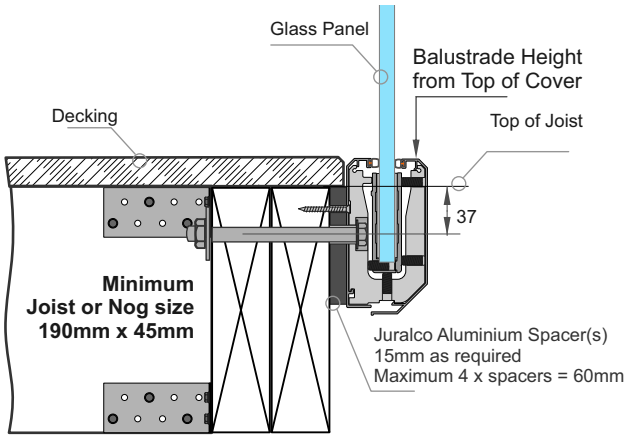

2- Attach Directly to Double or Triple Joists using 15mm Spacers.

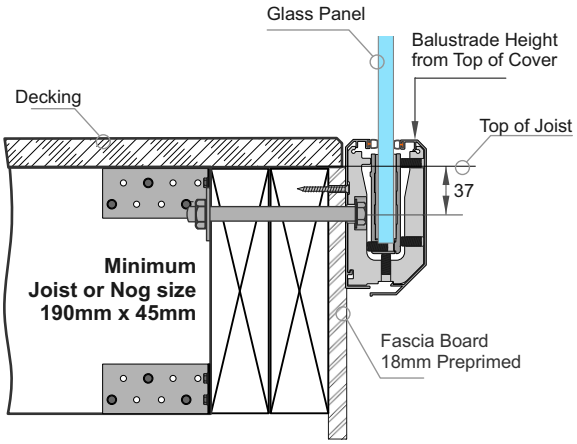

3 - Attach Directly to a Fascia then Double or Triple Joists

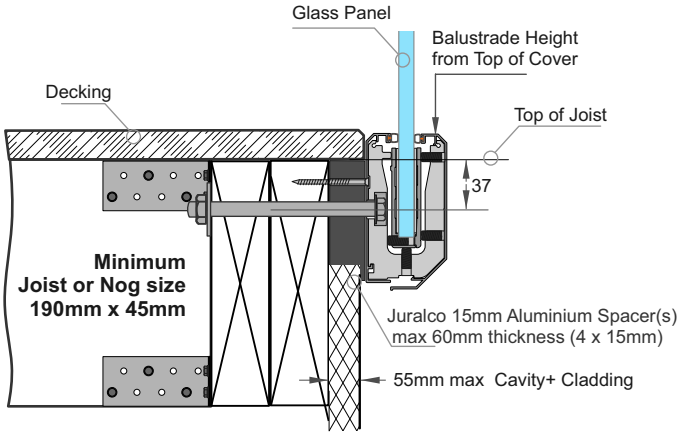

4 - Attach through Cavity Wall to Double or Triple Joists using 15mm Spacers (60mm max)

Rear Spacer Plates
94 high x 100 wide

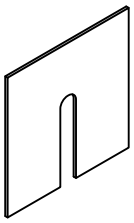

1mm thick Plate
Part No JET/IB/CSP/1.0

5mm thick Plate
Part No JET/IB/CSP/5.0

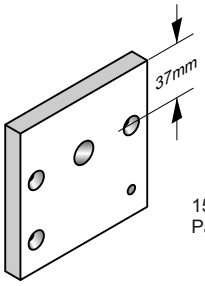

15mm thick Plate
Part No JET/IB/CSP/15

Juralco Edgetec Infinity® Balustrade System
Typical Fixing - Residential

Typical FACE Fix to Timber - M12 SS Lag/Coachscrew

Complies with NZS3604:2011 - Double Boundary Joists

Up to and including Very High Wind Zone
Residential
A, A Other and C3 only

Glass Thickness, Type	Balustrade Height (max)	Clamp Spacing (max)
12 T	1200	500
15.2 L	1150	500
13.52SG	1050	350

All these, incl Pools Lag/Coachscrew attach OK

Height/Spacings for this mounting type only

Up to and including Very High Wind Zone Pool Fence only			Up to and including Extra High Wind Zone Pool Fence only		
Applies to Pool Fences not protecting a fall of 1.0m or more					
Glass Thickness, Type	Fence Height (max)	Clamp Spacing (max)	Glass Thickness, Type	Fence Height (max)	Clamp Spacing (max)
12T	1250	500	15T	1250	500

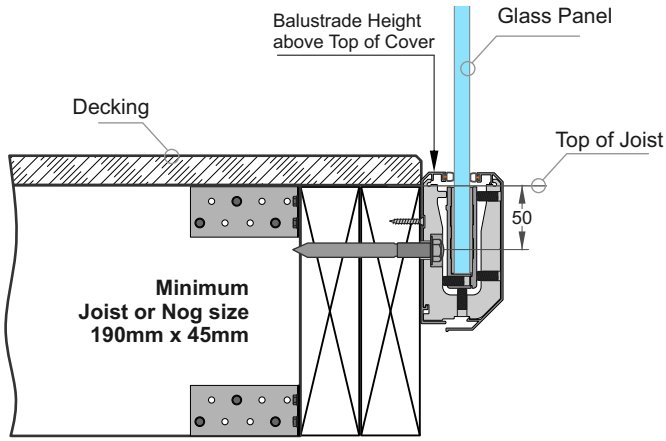

See Approved Face Fix Options page

General Notes:
1 - Glass thickness, mm
Glass type T= Toughened, L = Laminated, SG = SentryGlas
2 - All measurements mm
3 - Refer to Elevations for Max Panel widths.
Use of Top Interlinking Rails (T and L only) or Stiffener Brackets (L and SG only)

Important Installation notes:
1 - The Project Engineer must ensure the structure can support the appropriate loads
2 - Substructure shown indicatively only. Timber SG8 minimum strength
3 - Lagscrew / Coachscrew 90mm min engagement into joists, predrill 6mm holes.
4 - Bond all Screws with SIKA Supergrip to full depth
5 - All Fixings must be Stainless steel

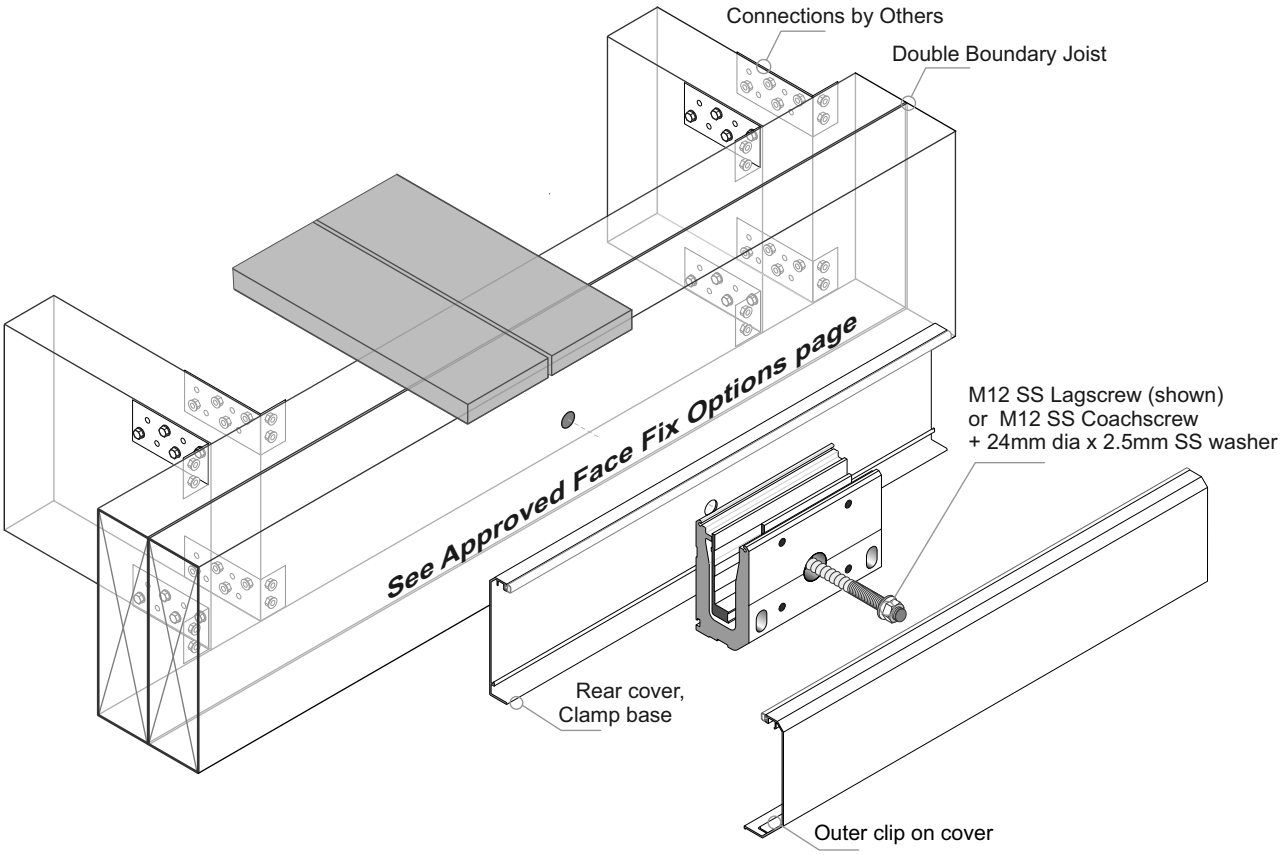

Juralco Edgetec Infinity® Balustrade System
Typical Fixing - Residential

Typical FACE Fix to Timber - M12 SS, Bolt or Threaded Rod

Complies with NZS3604:2011 - Double Boundary Joists

Up to and including Very High Wind Zone
Residential
A, A Other and C3 only

Glass Thickness, Type	Balustrade Height (max)	Clamp Spacing (max)
12 T	1200	500
15.2 L	1150	500
13.52SG	1050	350

Height/Spacings for this mounting type only

Up to and including Very High Wind Zone Pool Fence only			Up to and including Extra High Wind Zone Pool Fence only		
Applies to Pool Fences not protecting a fall of 1.0m or more					
Glass Thickness, Type	Fence Height (max)	Clamp Spacing (max)	Glass Thickness, Type	Fence Height (max)	Clamp Spacing (max)
12T	1250	500	15T	1250	500

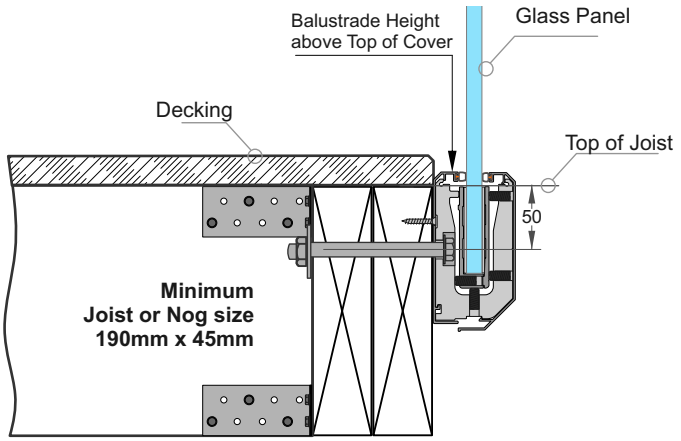

See Approved Face Fix Options page

General Notes:
1 - Glass thickness, mm
Glass type T= Toughened, L = Laminated, SG = SentryGlas
2 - All measurements mm
3 - Refer to Elevations for Max Panel widths.
Use of Top Interlinking Rails (T and L only) or Stiffener Brackets (L and SG only)

Important Installation notes:
1 - The Project Engineer must ensure the structure can support the appropriate loads
2 - Substructure shown indicatively only. Timber SG8 minimum strength
3 - All Fixings must be Stainless steel

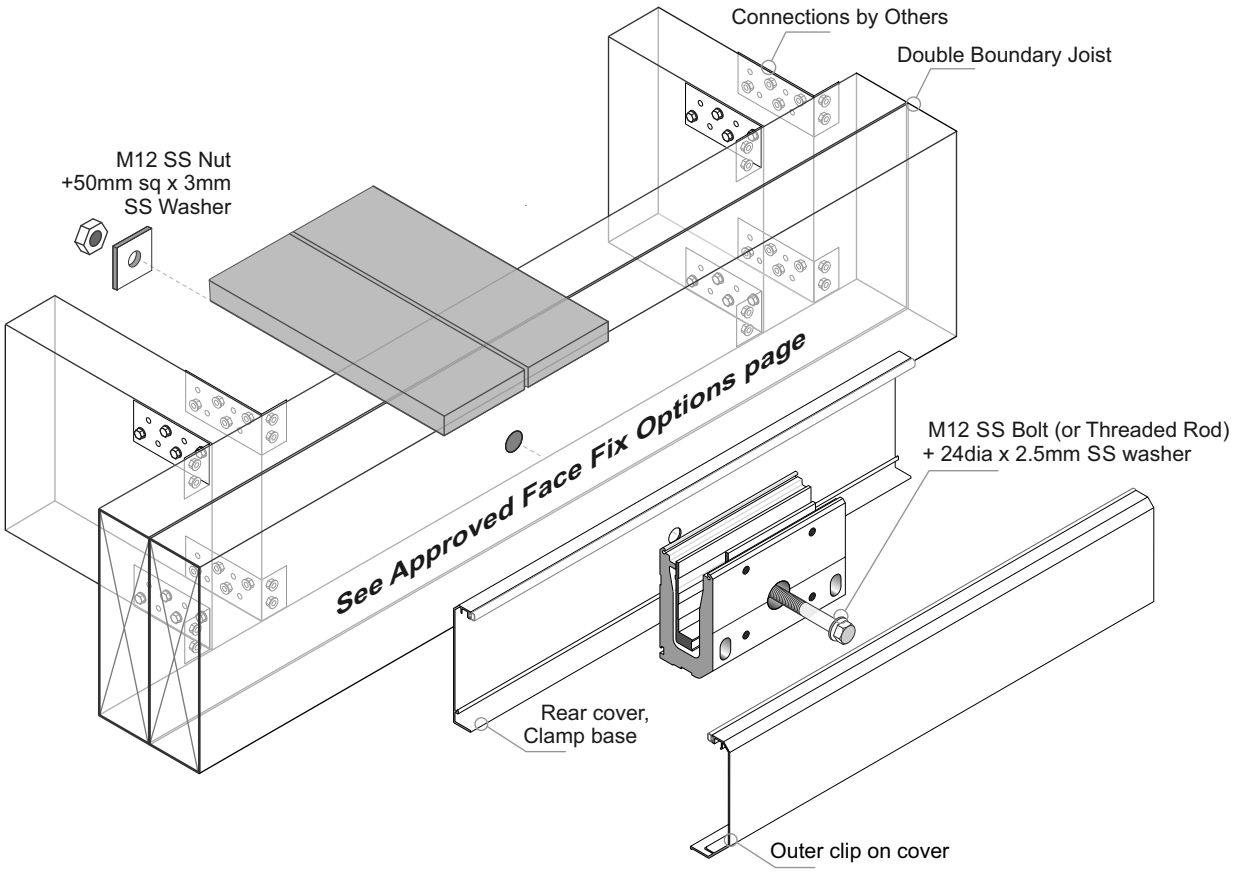

Juralco Edgetec Infinity® Balustrade System
Typical Fixing - Residential

Typical Hidden FACE Fix to Timber - M12 SS Lag/Coachscrew

Complies with NZS3604:2011 - Double Boundary Joists

Up to and including Very High Wind Zone
Residential
A, A Other and C3 only

Glass Thickness, Type	Balustrade Height (max)	Clamp Spacing (max)
12 T	1200	500
15.2 L	1150	500
13.52SG	1050	350

All these, incl Pools Lag/Coachscrew attach OK

Height/Spacings for this mounting type only

Up to and including Very High Wind Zone Pool Fence only			Up to and including Extra High Wind Zone Pool Fence only		
Applies to Pool Fences not protecting a fall of 1.0m or more					
Glass Thickness, Type	Fence Height (max)	Clamp Spacing (max)	Glass Thickness, Type	Fence Height (max)	Clamp Spacing (max)
12T	1250	500	15T	1250	500

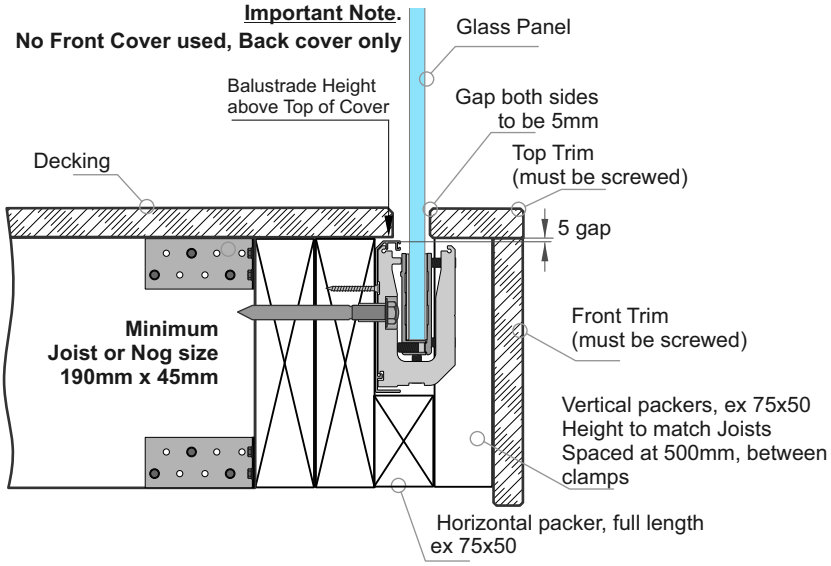

General Notes:
1 - Glass thickness, mm
Glass type T= Toughened, L = Laminated, SG = SentryGlas
2 - All measurements mm
3 - Refer to Elevations for Max Panel widths.
Use of Top Interlinking Rails (T and L only) or Stiffener Brackets (L and SG only)

Important Installation notes:
1 - The Project Engineer must ensure the structure can support the appropriate loads
2 - Substructure shown indicatively only. Timber SG8 minimum strength
3 - Lagscrew / Coachscrew 90mm min engagement into joists, predrill 6mm holes.
4 - Bond all Screws with SIKA Supergrip to full depth
5 - All Fixings must be Stainless steel

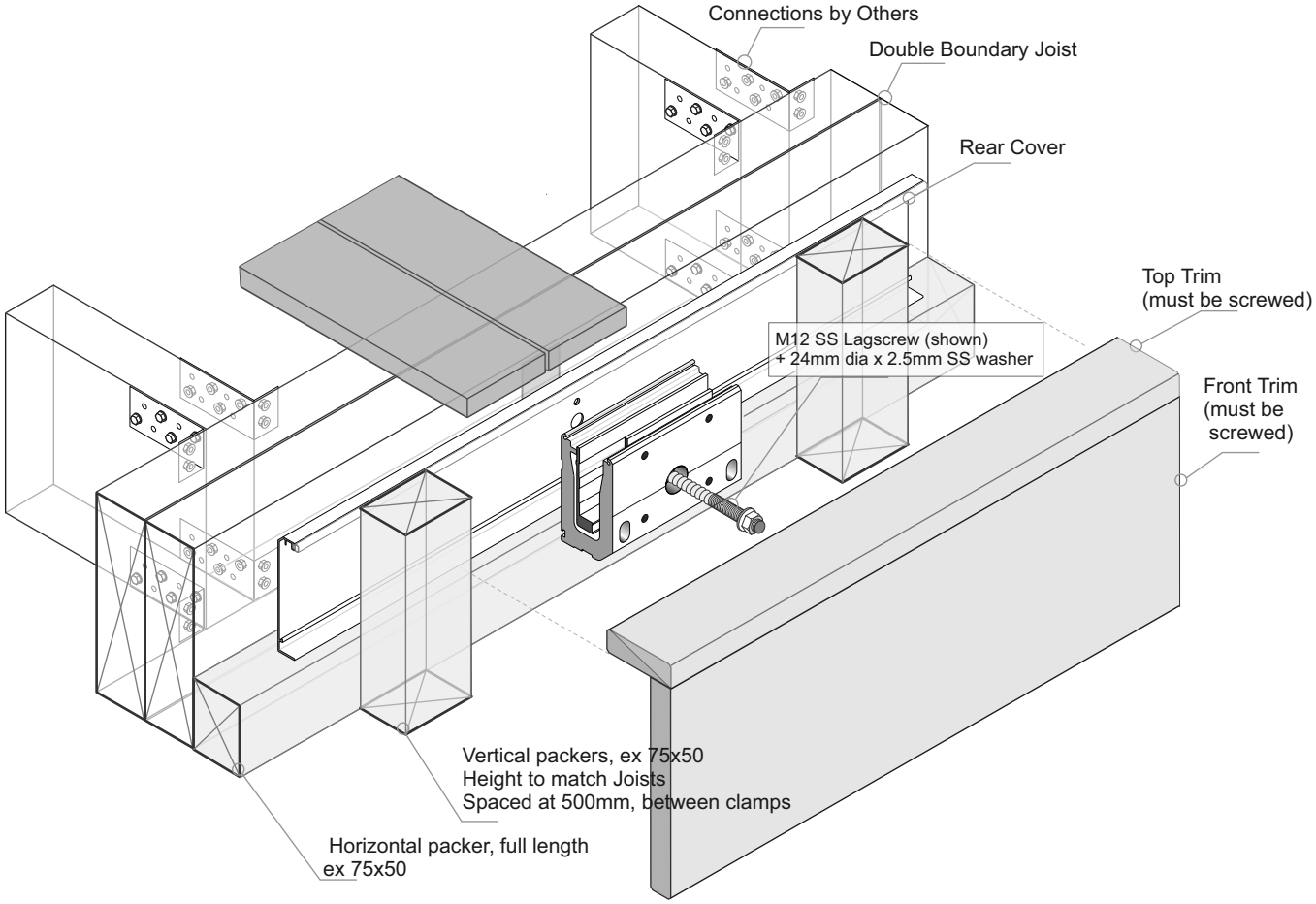

Juralco Edgetec Infinity® Balustrade System
Typical Fixing - Residential

Typical FACE Fix through a cavity into Timber - M12 SS Lag/Coachscrew

Complies with NZS3604:2011 - Double Boundary Joists

Up to and including Very High Wind Zone
Residential
A, A Other and C3 only

Glass Thickness, Type	Balustrade Height (max)	Clamp Spacing (max)
12 T	1200	500
15.2 L	1150	500
13.52SG	1050	350

All these, incl Pools Lag/Coachscrew attach OK

Height/Spacings for this mounting type only

Up to and including Very High Wind Zone Pool Fence only			Up to and including Extra High Wind Zone Pool Fence only		
Applies to Pool Fences not protecting a fall of 1.0m or more					
Glass Thickness, Type	Fence Height (max)	Clamp Spacing (max)	Glass Thickness, Type	Fence Height (max)	Clamp Spacing (max)
12T	1250	500	15T	1250	500

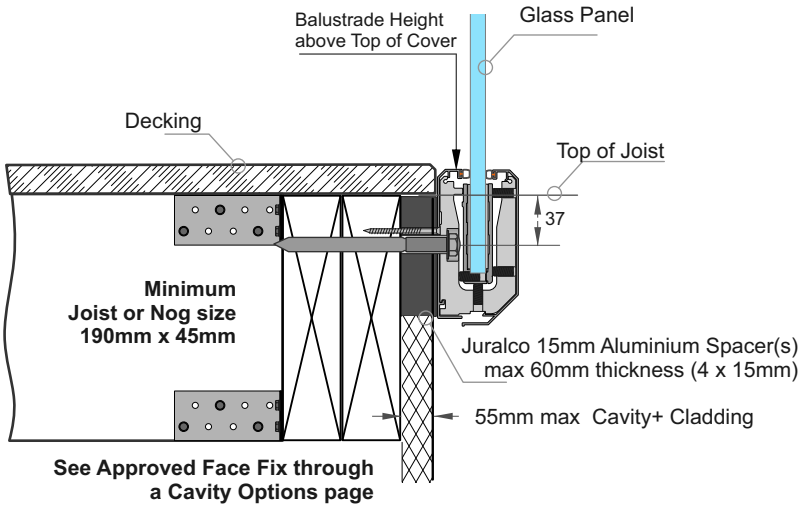

General Notes:
1 - Glass thickness, mm
Glass type T= Toughened, L = Laminated, SG = SentryGlas
2 - All measurements mm
3 - Refer to Elevations for Max Panel widths.
Use of Top Interlinking Rails (T and L only) or Stiffener Brackets (L and SG only)

Important Installation notes:
1 - The Project Engineer must ensure the structure can support the appropriate loads
2 - Substructure shown indicatively only. Timber SG8 minimum strength
3 - Lagscrew / Coachscrew 90mm min engagement into joists, predrill 6mm holes.
4 - Bond all Screws with SIKA Supergrip to full depth
5 - All Fixings must be Stainless steel

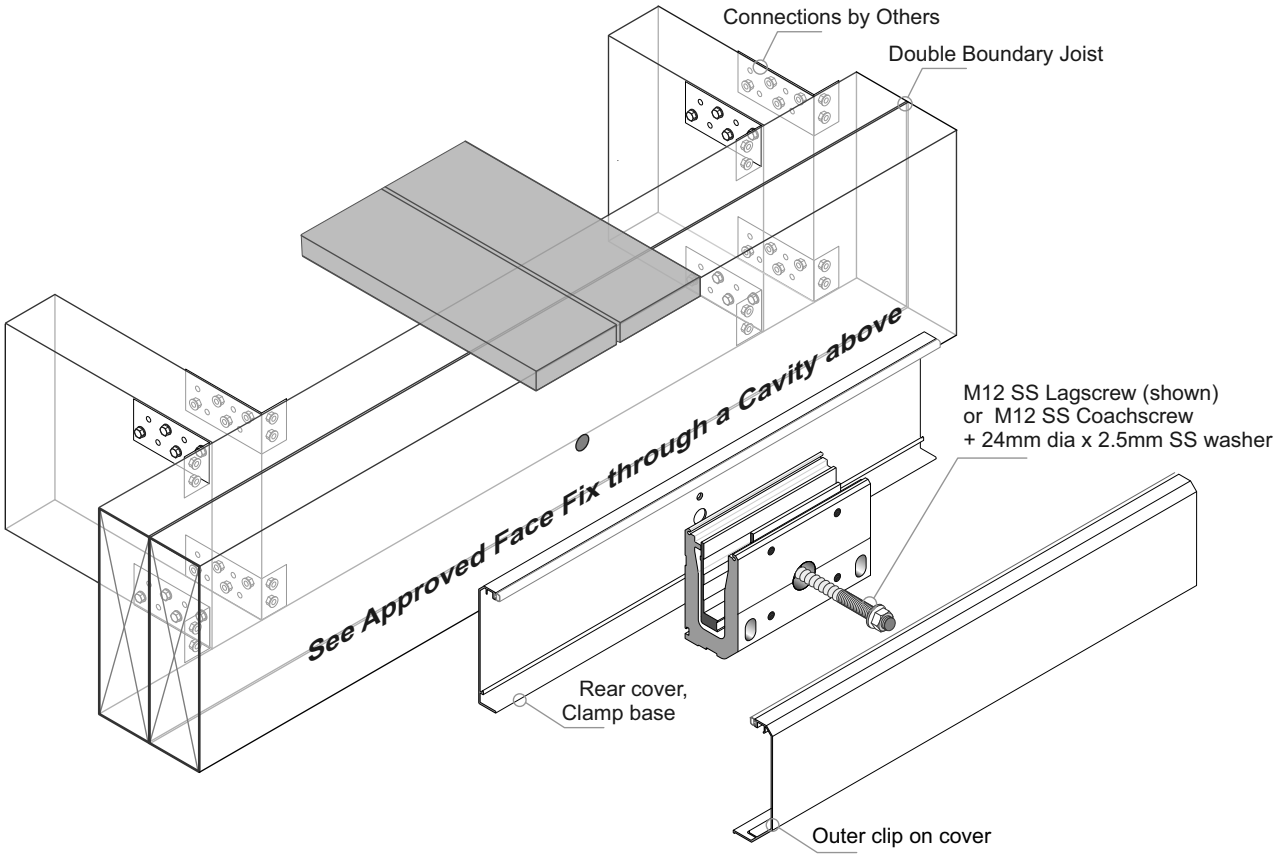

Juralco Edgetec Infinity® Balustrade System
Typical Fixing - Commercial

Typical FACE Fix to Timber - M12 SS Coachscrew

Complies with NZS3604:2011 - Triple Boundary Joists

Up to and including Extra High Wind Zone
Commercial
B, E and C3 only

Glass Thickness, Type	Balustrade Height (max)	Clamp Spacing (max)
15 T	1300	400
17.2 L	1300	400
17.52SG	1200	350

All these, incl Pools Coachscrew attach OK

Height/Spacings for this mounting type only

Up to and including Very High Wind Zone Pool Fence only			Up to and including Extra High Wind Zone Pool Fence only		
Applies to Pool Fences not protecting a fall of 1.0m or more					
Glass Thickness, Type	Fence Height (max)	Clamp Spacing (max)	Glass Thickness, Type	Fence Height (max)	Clamp Spacing (max)
12T	1250	500	15T	1250	500

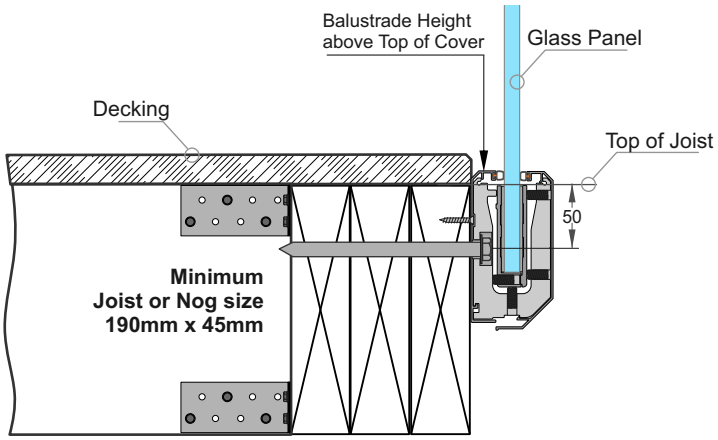

See Approved Face Fix Options page

General Notes:
1 - Glass thickness, mm
Glass type T= Toughened, L = Laminated, SG = SentryGlas
2 - All measurements mm
3 - Refer to Elevations for Max Panel widths.
Use of Top Interlinking Rails (T and L only) or Stiffener Brackets (L and SG only)

Important Installation notes:
1 - The Project Engineer must ensure the structure can support the appropriate loads
2 - Substructure shown indicatively only. Timber SG8 minimum strength
3 - Coachscrews 130mm min engagement into joists, predrill 6mm holes.
4 - Bond all coachscrews with SIKA Supergrip to full depth
5 - All Fixings must be Stainless steel

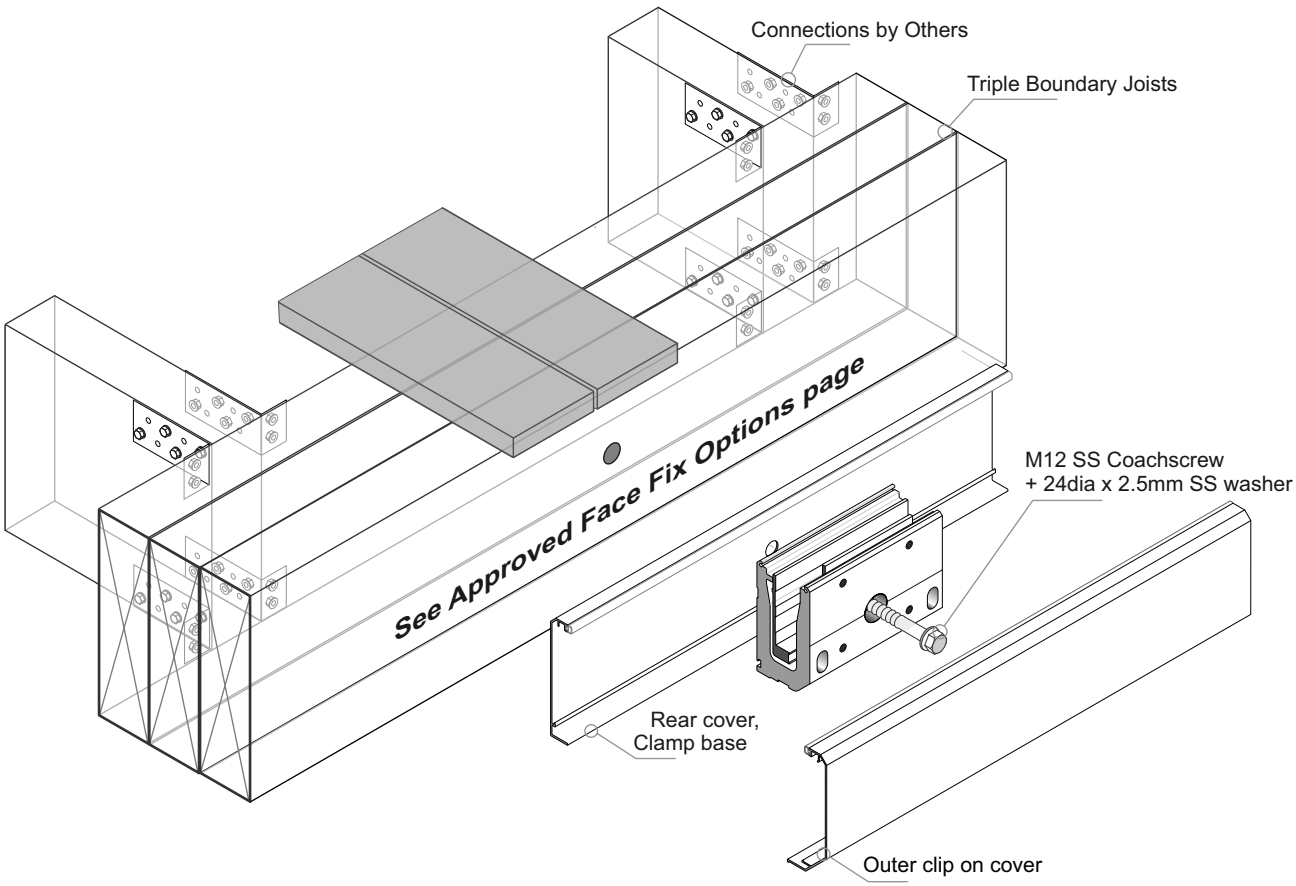

Juralco Edgetec Infinity® Balustrade System
Typical Fixing - Commercial

Typical FACE Fix to Timber - M12 SS, Bolt or Threaded Rod

Complies with NZS3604:2011 - Double Boundary Joists

Up to and including Extra High Wind Zone
Commercial
B, E and C3 only

Glass Thickness, Type	Balustrade Height (max)	Clamp Spacing (max)
15 T	1300	400
17.2 L	1300	400
17.52SG	1200	350

Height/Spacings for this mounting type only

Up to and including Very High Wind Zone Pool Fence only			Up to and including Extra High Wind Zone Pool Fence only		
Applies to Pool Fences not protecting a fall of 1.0m or more					
Glass Thickness, Type	Fence Height (max)	Clamp Spacing (max)	Glass Thickness, Type	Fence Height (max)	Clamp Spacing (max)
12T	1250	500	15T	1250	500

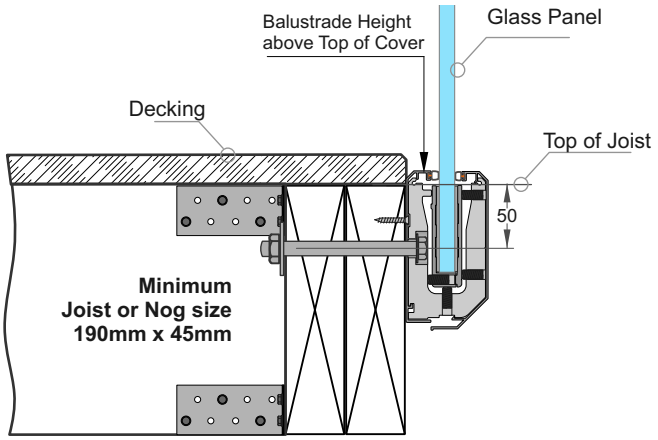

See Approved Face Fix Options page

General Notes:
1 - Glass thickness, mm
Glass type T= Toughened, L = Laminated, SG = SentryGlas
2 - All measurements mm
3 - Refer to Elevations for Max Panel widths.
Use of Top Interlinking Rails (T and L only) or Stiffener Brackets (L and SG only)

Important Installation notes:
1 - The Project Engineer must ensure the structure can support the appropriate loads
2 - Substructure shown indicatively only. Timber SG8 minimum strength
3 - All Fixings must be Stainless steel

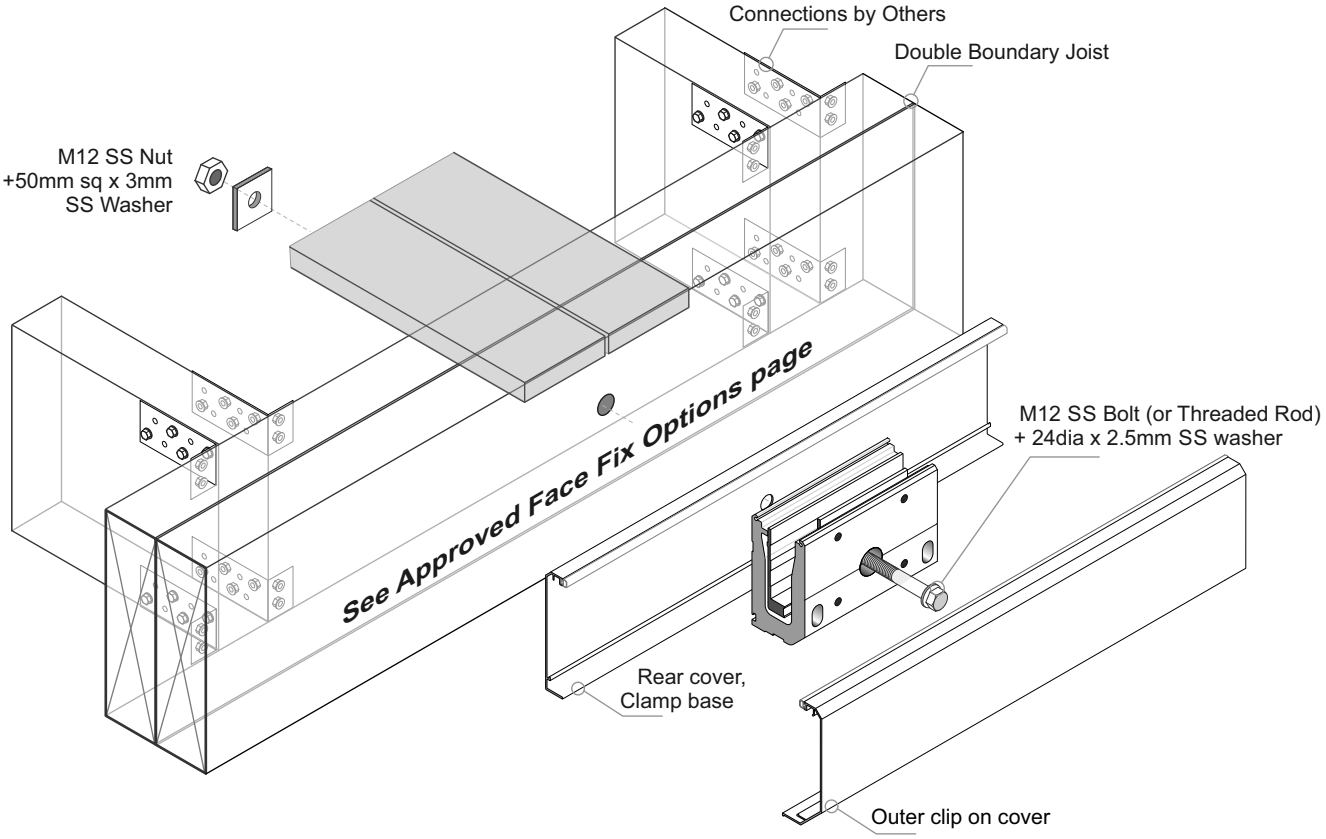

Juralco Edgetec Infinity® Balustrade System
Typical Fixing - Commercial

Typical FACE Fix through a Cavity into Timber - M12 SS, Bolt or Threaded Rod

Complies with NZS3604:2011 - Double Boundary Joists

Up to and including Extra High Wind Zone
Commercial
B, E and C3 only

Glass Thickness, Type	Balustrade Height (max)	Clamp Spacing (max)
15 T	1300	400
17.2 L	1300	400
17.52SG	1200	350

All these, incl Pools Coachscrew attach OK

Height/Spacings for this mounting type only

Up to and including Very High Wind Zone Pool Fence only			Up to and including Extra High Wind Zone Pool Fence only		
Applies to Pool Fences not protecting a fall of 1.0m or more					
Glass Thickness, Type	Fence Height (max)	Clamp Spacing (max)	Glass Thickness, Type	Fence Height (max)	Clamp Spacing (max)
12T	1250	500	15T	1250	500

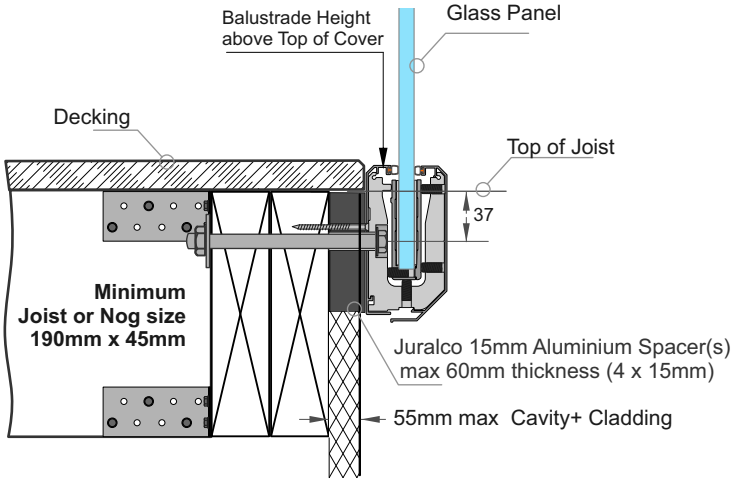

General Notes:
1 - Glass thickness, mm
Glass type T= Toughened, L = Laminated, SG = SentryGlas
2 - All measurements mm
3 - Refer to Elevations for Max Panel widths.
Use of Top Interlinking Rails (T and L only) or Stiffener Brackets (L and SG only)

Important Installation notes:
1 - The Project Engineer must ensure the structure can support the appropriate loads
2 - Substructure shown indicatively only. Timber SG8 minimum strength
3 - All Fixings must be Stainless steel

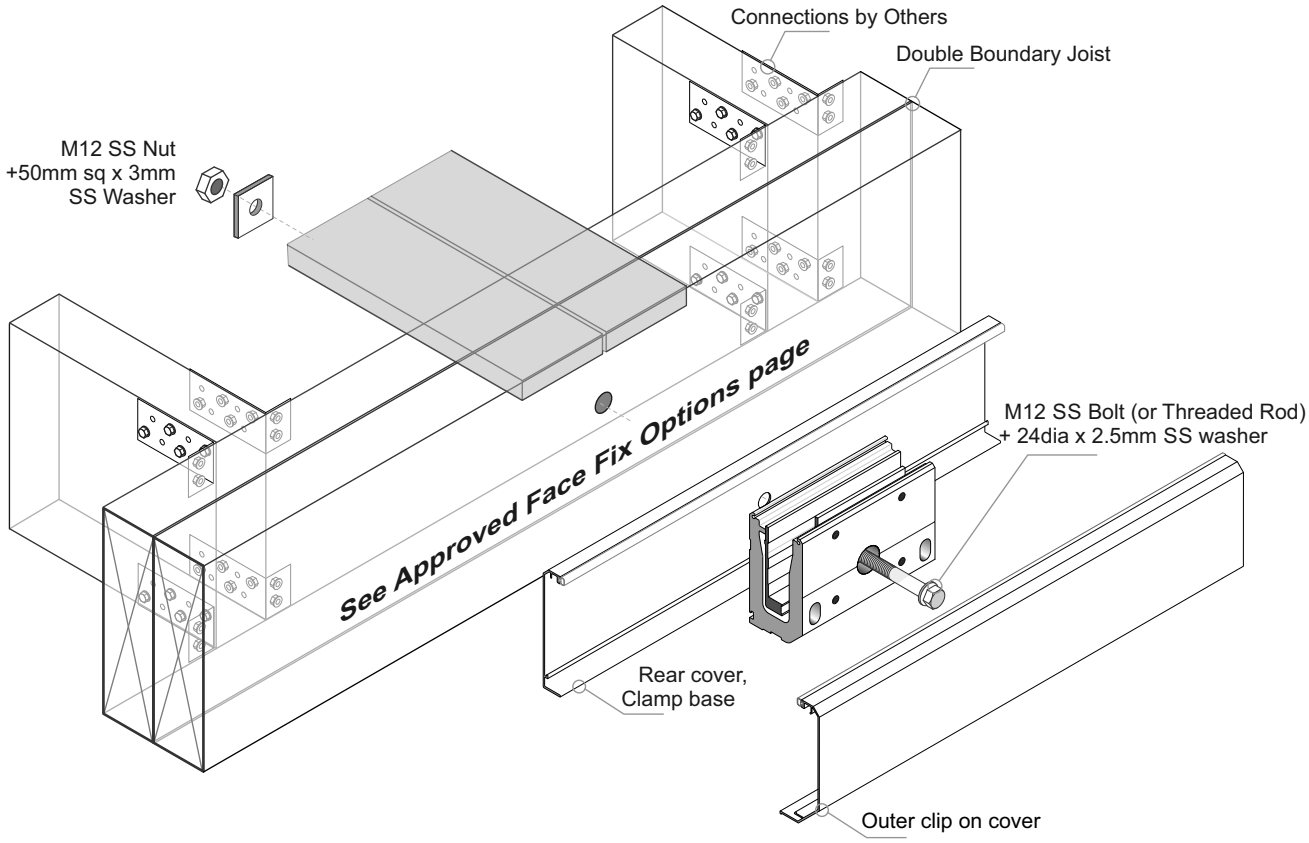

Juralco Edgetec Infinity® Balustrade System
Typical Fixing - Commercial

Typical Hidden FACE Fix to Timber - M12 SS Coachscrew

Complies with NZS3604:2011 - Triple Boundary Joists

Up to and including Extra High Wind Zone
Commercial
B, E and C3 only

Glass Thickness, Type	Balustrade Height (max)	Clamp Spacing (max)
15 T	1300	400
17.2 L	1300	400
17.52SG	1200	350

All these, incl Pools Coachscrew attach OK

Height/Spacings for this mounting type only

Up to and including Very High Wind Zone Pool Fence only			Up to and including Extra High Wind Zone Pool Fence only		
Applies to Pool Fences not protecting a fall of 1.0m or more					
Glass Thickness, Type	Fence Height (max)	Clamp Spacing (max)	Glass Thickness, Type	Fence Height (max)	Clamp Spacing (max)
12T	1250	500	15T	1250	500

General Notes:
1 - Glass thickness, mm
Glass type T= Toughened, L = Laminated, SG = SentryGlas
2 - All measurements mm
3 - Refer to Elevations for Max Panel widths.
Use of Top Interlinking Rails (T and L only) or Stiffener Brackets (L and SG only)

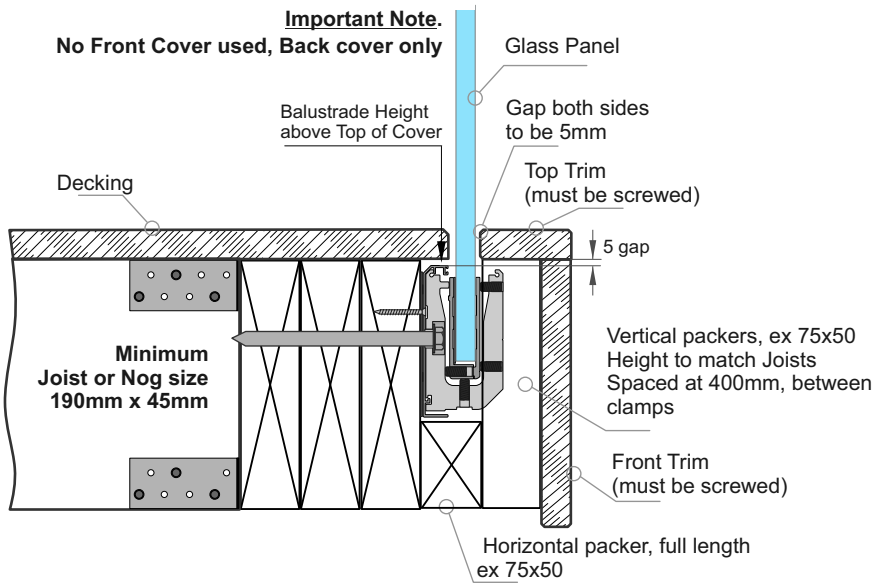

Important Installation notes:
1 - The Project Engineer must ensure the structure can support the appropriate loads
2 - Substructure shown indicatively only. Timber SG8 minimum strength
3 - Coachscrews 130mm min engagement into joists, predrill 6mm holes.
4 - Bond all coachscrews with SIKA Supergrip to full depth
5 - All Fixings must be Stainless steel

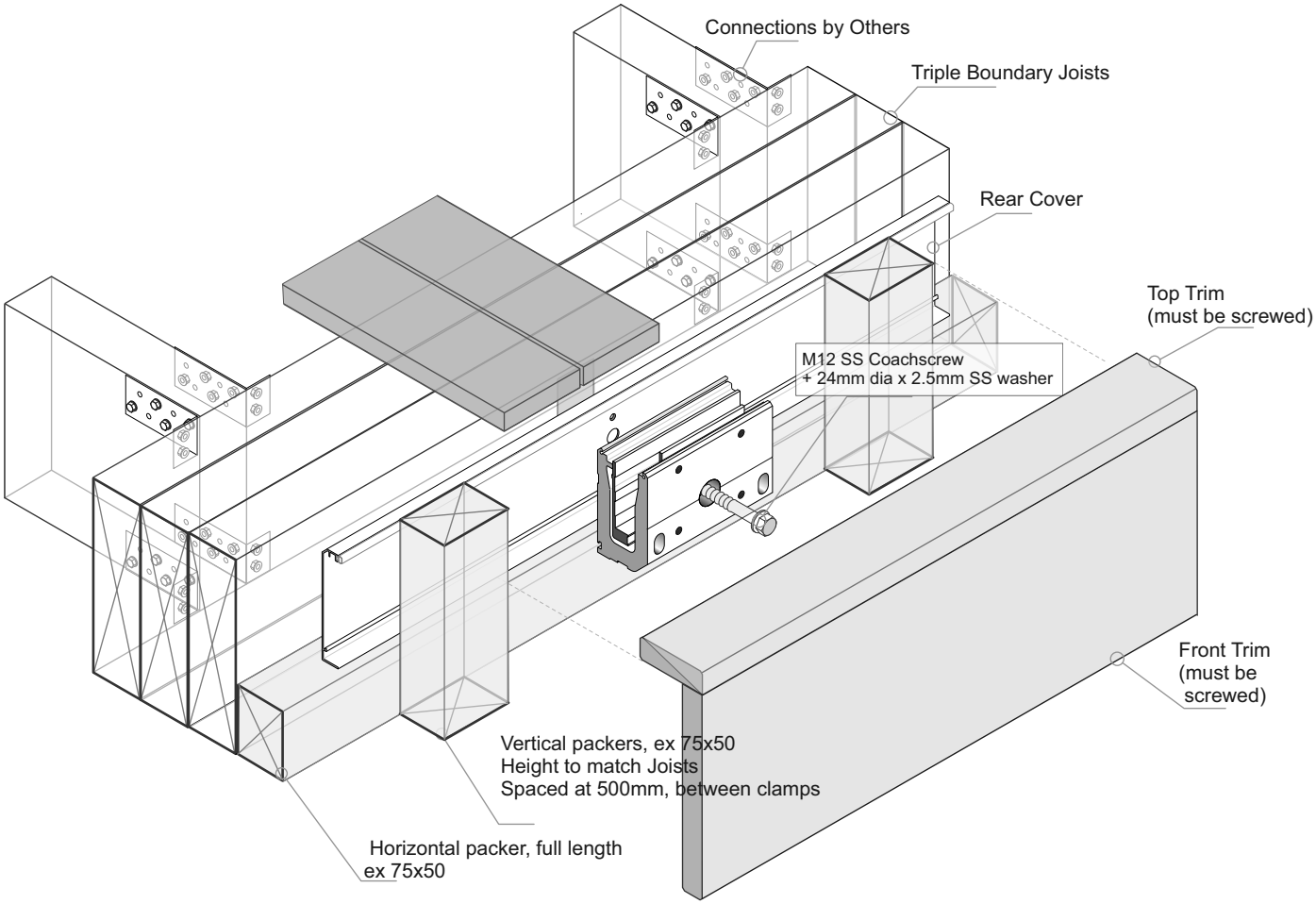

Juralco Edgetec Infinity® Balustrade System
Typical Fixing - Commercial

Typical FACE Fix through a Cavity into Timber deck - M12 SS Coachscrew

Complies with NZS3604:2011 - Triple Boundary Joists

Up to and including Extra High Wind Zone
Commercial
B, E and C3 only

Glass Thickness, Type	Balustrade Height (max)	Clamp Spacing (max)
15 T	1300	400
17.2 L	1300	400
17.52SG	1200	350

All these, incl Pools Coachscrew attach OK

Height/Spacings for this mounting type only

Up to and including Very High Wind Zone Pool Fence only			Up to and including Extra High Wind Zone Pool Fence only		
Applies to Pool Fences not protecting a fall of 1.0m or more					
Glass Thickness, Type	Fence Height (max)	Clamp Spacing (max)	Glass Thickness, Type	Fence Height (max)	Clamp Spacing (max)
12T	1250	500	15T	1250	500

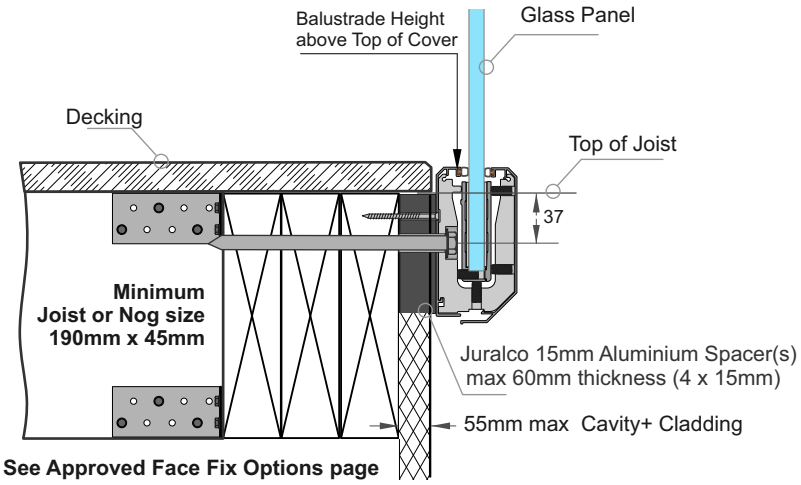

See Approved Face Fix Options page

General Notes:
1 - Glass thickness, mm
Glass type T= Toughened, L = Laminated, SG = SentryGlas
2 - All measurements mm
3 - Refer to Elevations for Max Panel widths.
Use of Top Interlinking Rails (T and L only) or Stiffener Brackets (L and SG only)

Important Installation notes:
1 - The Project Engineer must ensure the structure can support the appropriate loads
2 - Substructure shown indicatively only. Timber SG8 minimum strength
3 - Coachscrews 130mm min engagement into joists, predrill 6mm holes.
4 - Bond all coachscrews with SIKA Supergrip to full depth
5 - All Fixings must be Stainless steel

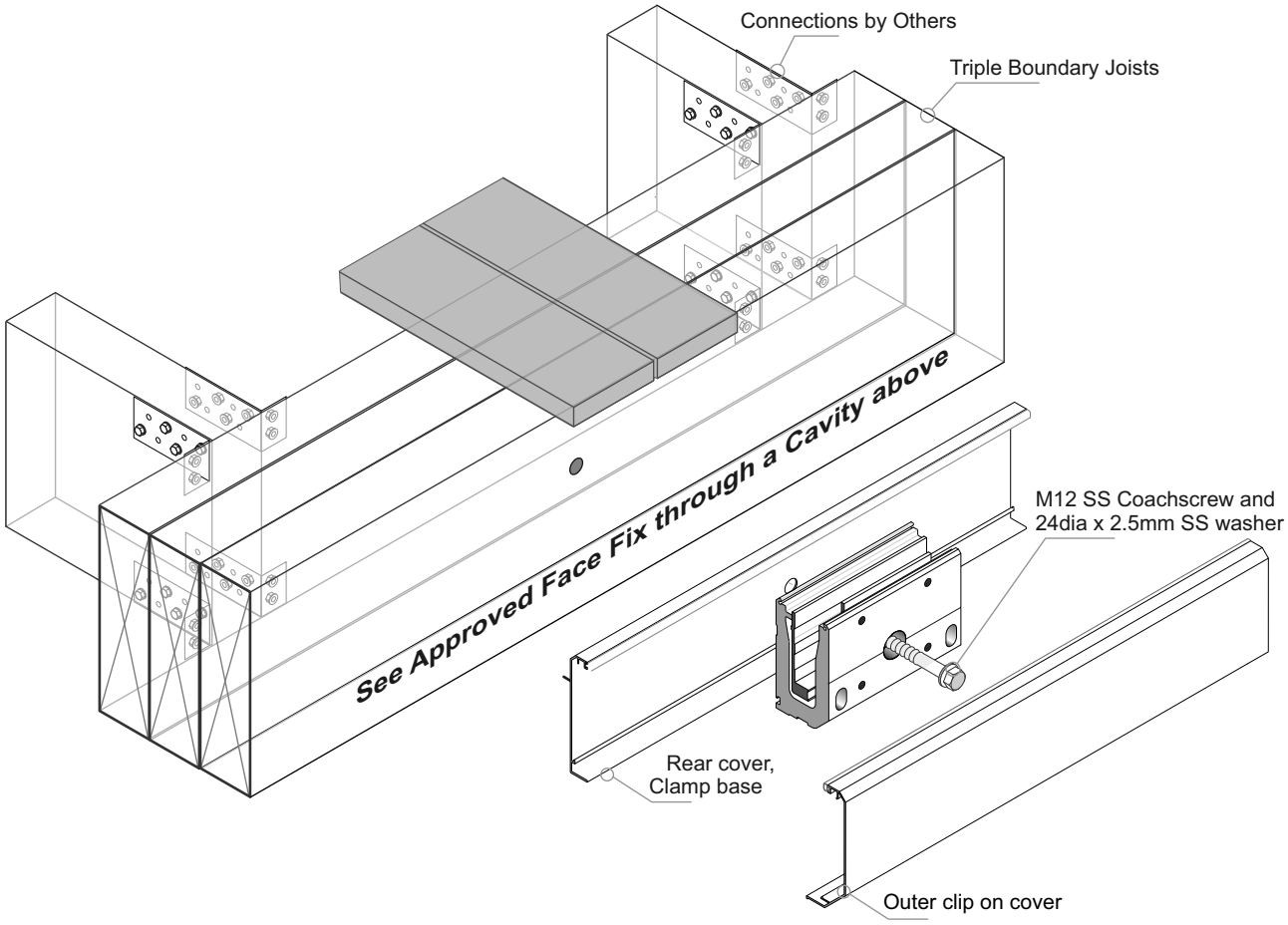

Typical FACE Fix to Steel - M12 SS, Bolt or Threaded Rod

Up to and including Very High Wind Zone Residential A, A Other and C3 only			Up to and including Extra High Wind Zone Commercial B, E and C3 only		
Glass Thickness, Type	Balustrade Height (max)	Clamp Spacing (max)	Glass Thickness, Type	Balustrade Height (max)	Clamp Spacing (max)
12 T	1200	500	15 T	1300	400
15.2 L	1150	500	17.2 L	1300	400
13.52SG	1050	350	17.52SG	1200	350

Height/Spacings for this mounting type only

Up to and including Very High Wind Zone Pool Fence only			Up to and including Extra High Wind Zone Pool Fence only		
Applies to Pool Fences not protecting a fall of 1.0m or more					
Glass Thickness, Type	Fence Height (max)	Clamp Spacing (max)	Glass Thickness, Type	Fence Height (max)	Clamp Spacing (max)
12T	1250	500	15T	1250	500

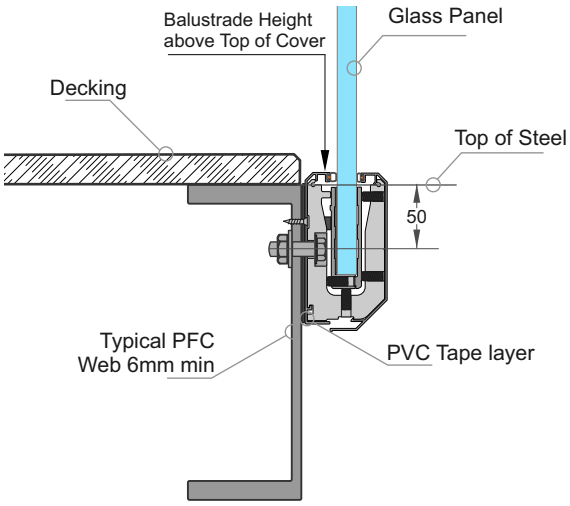

General Notes:
1 - Glass thickness, mm
Glass type T= Toughened, L = Laminated, SG = SentryGlas
2 - All measurements mm
3 - Refer to Elevations for Max Panel widths.
Use of Top Interlinking Rails (T and L only) or Stiffener Brackets (L and SG only)

Important Installation notes:
1 - The Project Engineer must ensure the structure can support the appropriate loads
2 - Substructure shown indicatively only
3 - An PVC tape layer must be placed between the Rear cover and Steel
4 - All fixings must be Stainless Steel

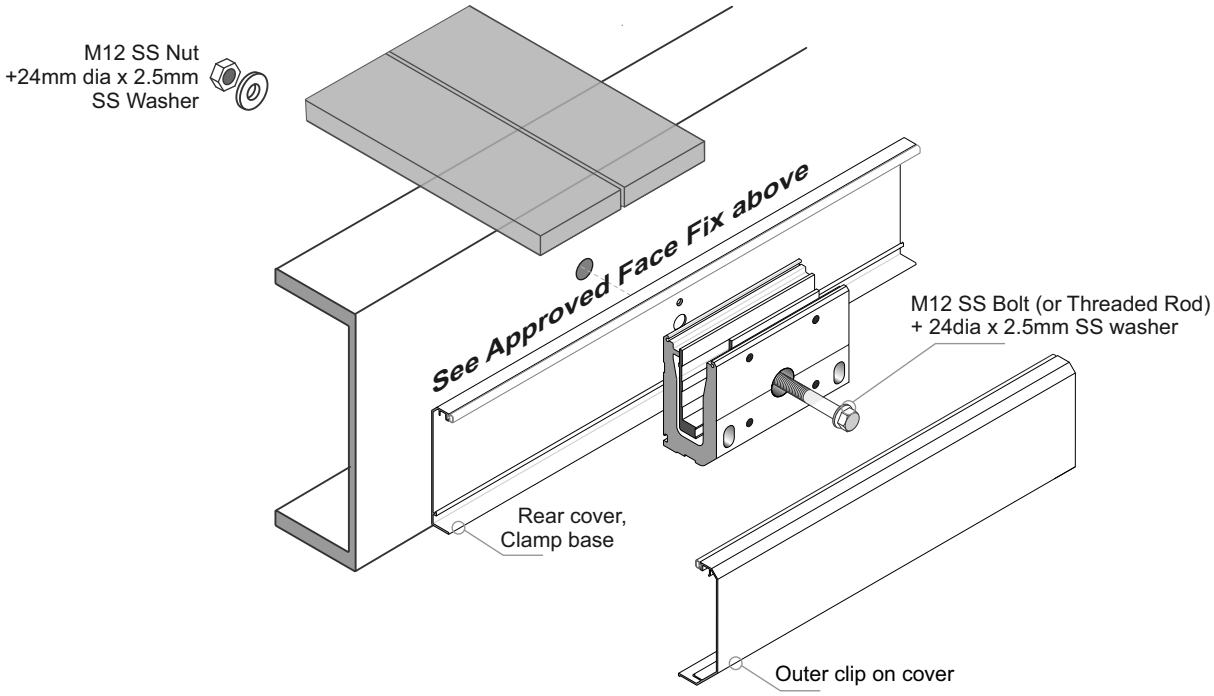

Typical FACE Fix to Steel, Wooden Packers - M12 SS, Bolt or Threaded Rod

Up to and including Very High Wind Zone Residential A, A Other and C3 only			Up to and including Extra High Wind Zone Commercial B, E and C3 only		
Glass Thickness, Type	Balustrade Height (max)	Clamp Spacing (max)	Glass Thickness, Type	Balustrade Height (max)	Clamp Spacing (max)
12 T	1200	500	15 T	1300	400
15.2 L	1150	500	17.2 L	1300	400
13.52SG	1050	350	17.52SG	1200	350

Height/Spacings for this mounting type only

Up to and including Very High Wind Zone Pool Fence only			Up to and including Extra High Wind Zone Pool Fence only		
Applies to Pool Fences not protecting a fall of 1.0m or more					
Glass Thickness, Type	Fence Height (max)	Clamp Spacing (max)	Glass Thickness, Type	Fence Height (max)	Clamp Spacing (max)
12T	1250	500	15T	1250	500

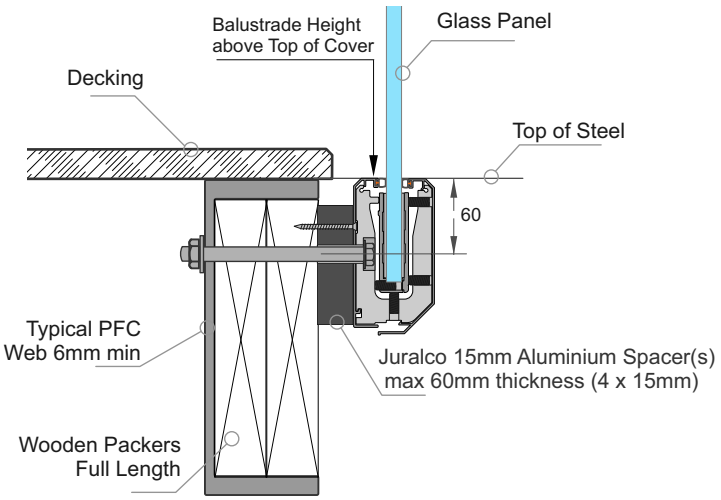

See Approved Face Fix Options page

General Notes:
1 - Glass thickness, mm
Glass type T= Toughened, L = Laminated, SG = SentryGlas
2 - All measurements mm
3 - Refer to Elevations for Max Panel widths.
Use of Top Interlinking Rails (T and L only) or Stiffener Brackets (L and SG only)

Important Installation notes:
1 - The Project Engineer must ensure the structure can support the appropriate loads
2 - Substructure shown indicatively only. Timber SG8 minimum strength
3 - All Fixings must be Stainless steel

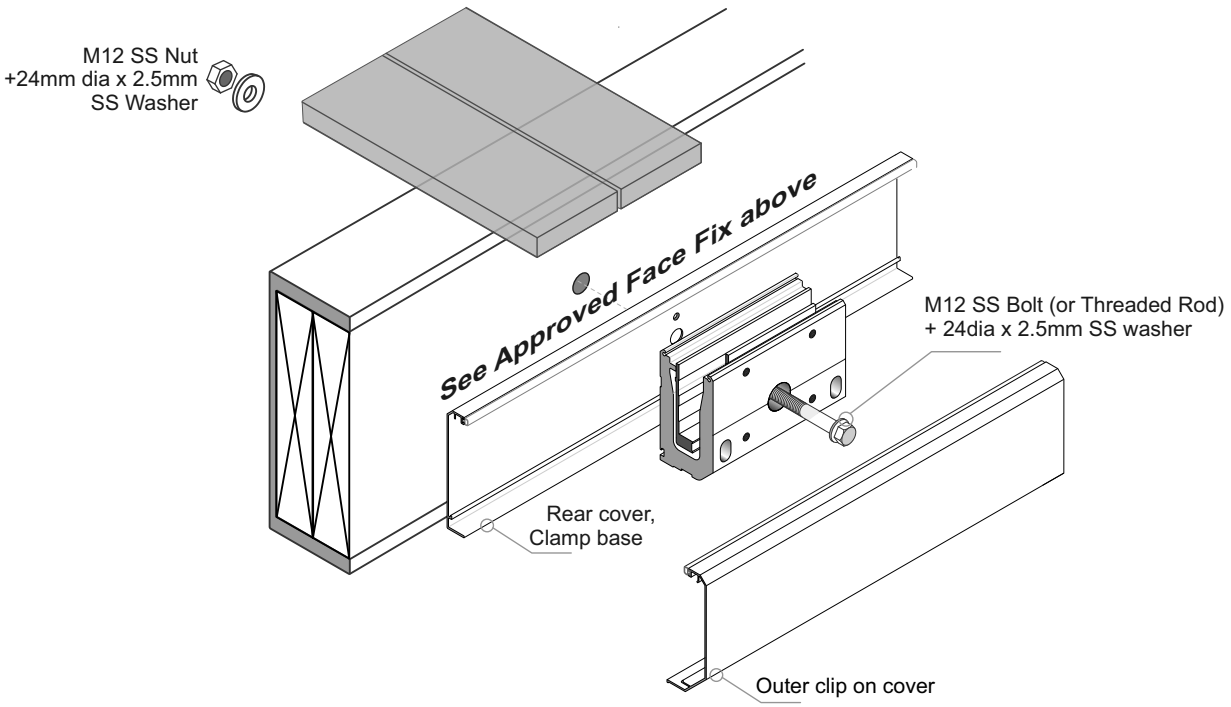

Typical FACE Fix to Steel, Wooden Packers - M12 SS, Bolt or Threaded Rod

Up to and including Very High Wind Zone Residential A, A Other and C3 only			Up to and including Extra High Wind Zone Commercial B, E and C3 only		
Glass Thickness, Type	Balustrade Height (max)	Clamp Spacing (max)	Glass Thickness, Type	Balustrade Height (max)	Clamp Spacing (max)
12 T	1200	500	15 T	1300	400
15.2 L	1150	500	17.2 L	1300	400
13.52SG	1050	350	17.52SG	1200	350

Height/Spacings for this mounting type only

Up to and including Very High Wind Zone Pool Fence only			Up to and including Extra High Wind Zone Pool Fence only		
Applies to Pool Fences not protecting a fall of 1.0m or more					
Glass Thickness, Type	Fence Height (max)	Clamp Spacing (max)	Glass Thickness, Type	Fence Height (max)	Clamp Spacing (max)
12T	1250	500	15T	1250	500

General Notes:
1 - Glass thickness, mm
Glass type T= Toughened, L = Laminated, SG = SentryGlas
2 - All measurements mm
3 - Refer to Elevations for Max Panel widths.
Use of Top Interlinking Rails (T and L only) or Stiffener Brackets (L and SG only)

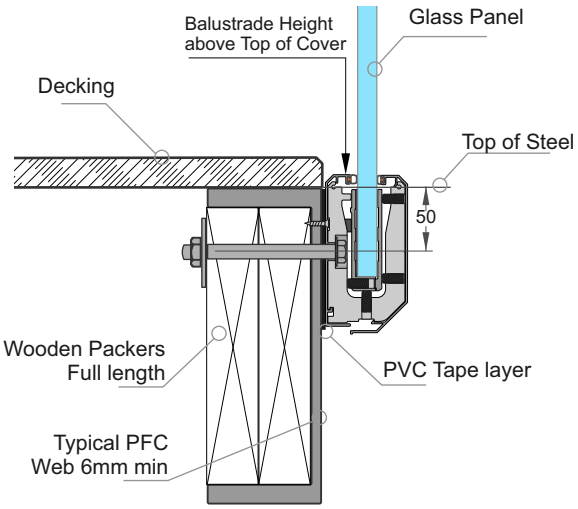

See Approved Face Fix Options page

Important Installation notes:
1 - The Project Engineer must ensure the structure can support the appropriate loads
2 - Substructure shown indicatively only. Timber SG8 minimum strength
3 - An PVC tape layer must be placed between the Rear cover and Steel
4 - All fixings must be Stainless Steel

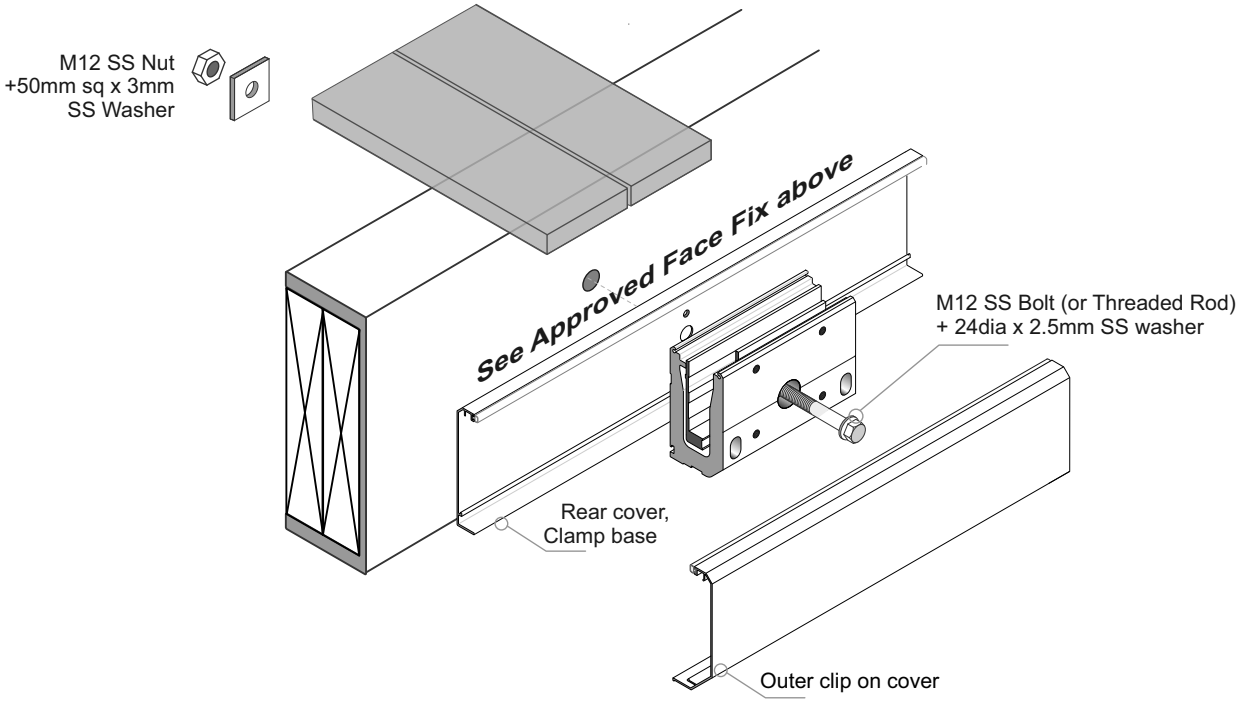

Typical FACE Fix to Concrete - M12 SS Threaded Rod Stud

Up to and including Very High Wind Zone Residential A, A Other and C3 only			Up to and including Extra High Wind Zone Commercial B, E and C3 only		
Glass Thickness, Type	Balustrade Height (max)	Clamp Spacing (max)	Glass Thickness, Type	Balustrade Height (max)	Clamp Spacing (max)
12 T	1200	500	15 T	1300	400
15.2 L	1150	500	17.2 L	1300	400
13.52SG	1050	350	17.52SG	1200	350

Height/Spacings for this mounting type only

Up to and including Very High Wind Zone Pool Fence only			Up to and including Extra High Wind Zone Pool Fence only		
Applies to Pool Fences not protecting a fall of 1.0m or more					
Glass Thickness, Type	Fence Height (max)	Clamp Spacing (max)	Glass Thickness, Type	Fence Height (max)	Clamp Spacing (max)
12T	1250	500	15T	1250	500

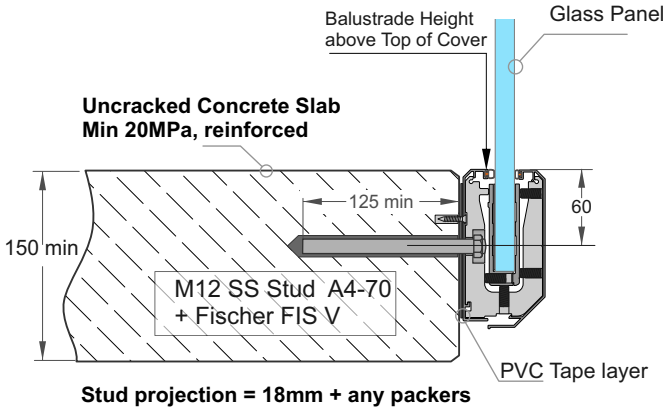

Stud projection = 18mm + any packers

General Notes:
1 - Glass thickness, mm
Glass type T= Toughened, L = Laminated, SG = SentryGlas
2 - All measurements mm
3 - Refer to Elevations for Max Panel widths.
Use of Top Interlinking Rails (T and L only) or Stiffener Brackets (L and SG only)

Important Installation Notes:
1 - The Project Engineer must ensure the structure can support the appropriate loads
2 - Substructure shown indicatively only
3 - Fixings must engage into the structural slab
4 - A PVC Tape layer must be installed between the Rear Cover and Concrete
5 - Use Threadlok on Nuts
6 - All fixings must be Stainless Steel

Installation details Fischer FIS V 300T

Thread diameter	M12
Drill hole diameter	= 14 mm
Drill hole depth	= 135 mm
Anchorage depth	= 125 mm
Drilling method	Hammer drilling
Drill hole cleaning	4 times blowing, 4 times brushing, 4 times blowing

No borehole cleaning required in case of using a hollow drill bit, e.g. fischer FHD.

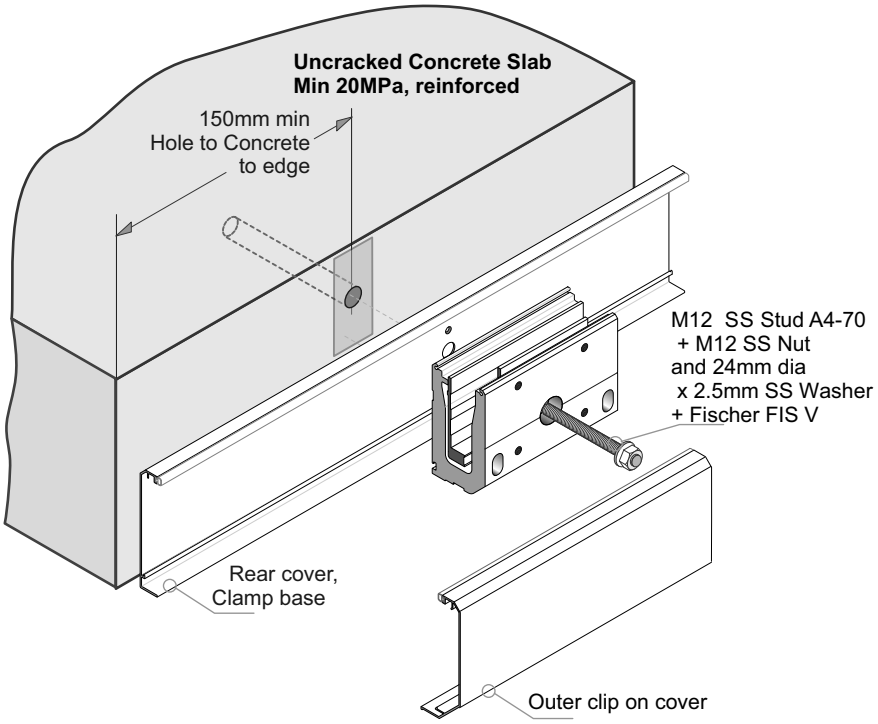

These Face Fix Installation Recommendations apply to all Substrates

Infinity Balustrade Face Fix Installation procedure on Boundary Joists. The Clamps must be Plumb and in Line

1 - Run string line along the Boundary Joist at the top edge of the Rear Cover
2 - Screw Rear cover to joists lightly using 10g C/s SS Screws.(PVC Tape for Steel and Concrete)
3 - Mark out position of Clamps (normally at Glass Panel joints)
4 - Use the string line determine if the joists are warped. Insert Spacers (1mm,5mm,15mm) if needed at Clamp Positions.
5 - Using the Rear cover mark out hole positions for Fasteners. Drill holes for appropriate Fastener, through Rear cover
6 - Fit bulb seal on Rear cover.
7 - Fit Clamps in place onto the Rear Cover + any Spacers. Tighten up firmly. Clamps must be Plumb and in Line

---

8 - Fit Glass into position inside the Clamps, using appropriate Gasket combinations
9 - Adjust the Vertical height grub screw on the bottom of the HD clamp to ensure the top edges of the glass panels are level
10 - Lightly nip the top 2 grub screws on the HD clamp to hold the glass vertical.
11 - Adjust the 4 lower grub screws on the HD clamp and Glass clamp assemblies for top edge Horizontal alignment
12 - When glass panels are in the correct position tighten top and bottom clamp screws on HD clamp (5.0Nm max)

---

13 - Cut Front cover to length and fit bulb seal
14 - Clip Front cover on
15 - Fit End plate kits as required (note: 2 different size plastic plugs and screws)

Fitting Stages 1 - 7 to get Clamp Plumb, both Vertical and Horizontal

Fitting Stages 8 - 12 to get Glass Plumb, both Vertical and Horizontal

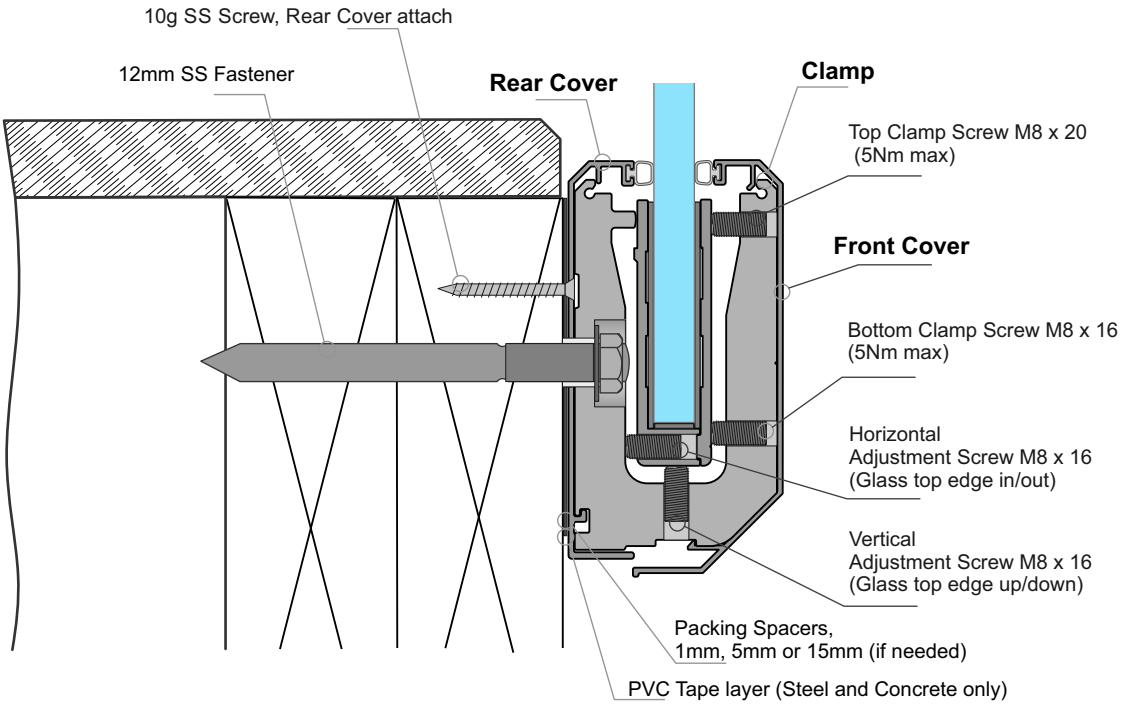

Edgetec Infinity® Glass Clamps
Top Fix + Interlinking Rail

Glass must have a minimum strength of 100Mpa. All edges polished

Residential & Domestic only
Occupancy types A, A Other and C3

For 12mm Toughened Glass
- **D max 500mm.**
- **BH max 1200mm**

For 15.2mm Toughened Laminated Glass
- **D max 500mm.**
- **BH max 1150mm**

Note: See individual Mounting pages for construction options

Max Tension load per Face fixing = 20kN

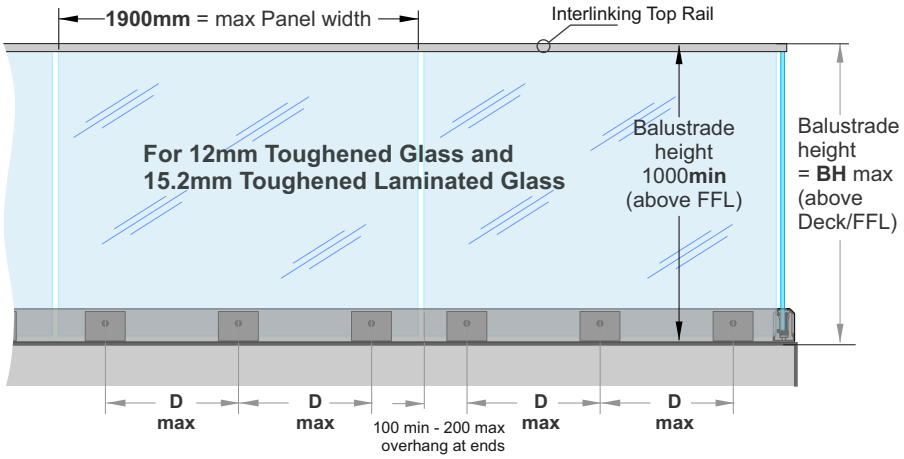

Exceeds the wind loading for all Wind Zones up to **and Including** **Very High Wind Zone** as set out in NZS 3604:2011

Refer to the Interlinking Top Rail page for conformance to NZS 4223.3.2016.

Edgetec Infinity® Glass Clamps
Top Fix + Interlinking Rail

Glass must have a minimum strength of 100Mpa. All edges polished

Commercial Occupancy
types B, E, and C3 only

For 15mm Toughened Glass and 17.2mm Toughened Laminated Glass
- **D max 400mm**
- **BH max 1300mm**

Note: See individual Mounting pages for construction options

Max Tension load per Face fixing = 23kN

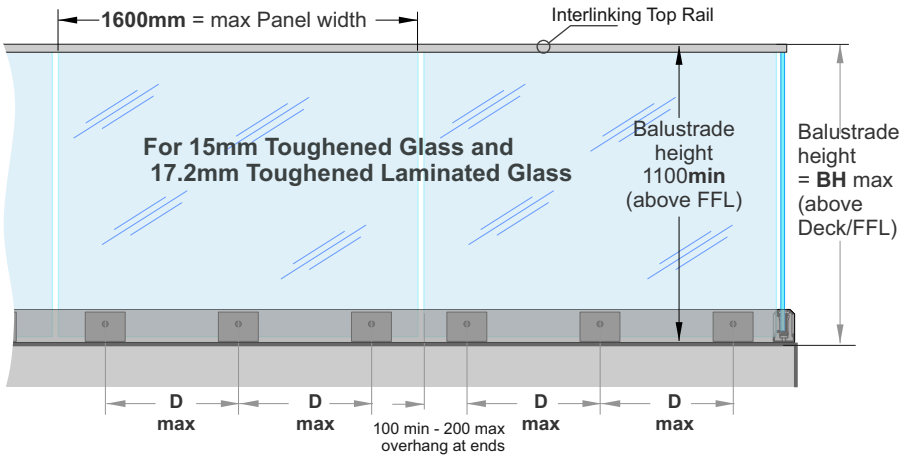

Exceeds the wind loading for all Wind Zones up to **and Including** **Extra High Wind Zone** as set out in NZS 3604:2011

Refer to the Interlinking Top Rail page for conformance to NZS 4223.3.2016.

Edgetec Infinity® Glass Clamps
Top Fix

POOL FENCING only

Glass must have a minimum strength of 100Mpa. All edges polished

Max Tension load per Face fixing = 27kN

Applies to Swimming Pools as of Jan 2017, complies with the Building Code clause F9 and section 162C of the Building Act.

Applies to Pool Fences not protecting a fall of 1.0m or more

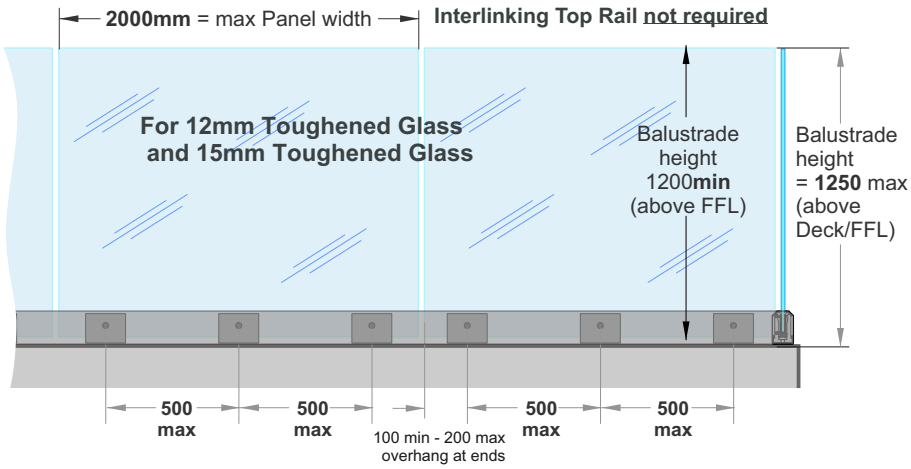

12mm Toughened - Up to and including Very High Wind Zone.	15mm Toughened - Up to and including Extra High Wind Zone

Juralco Edgetec Infinity® Balustrade System
Typical Layouts - Top Fix

Edgetec Infinity® Glass Clamps
Top Fix + Stiffener Brackets

Glass must have a minimum strength of 100Mpa. All edges polished

Residential & Domestic only
Occupancy types A, A Other and C3

For 15.2mm Toughened Laminated Glass

- **D max 500mm.**
- **BH max 1150mm**

For 13.52mm SentryGlas

- **D max 350mm.**
- **BH max 1050mm**

Note: See individual Mounting pages for construction options

Max Tension load per Face fixing = 20kN

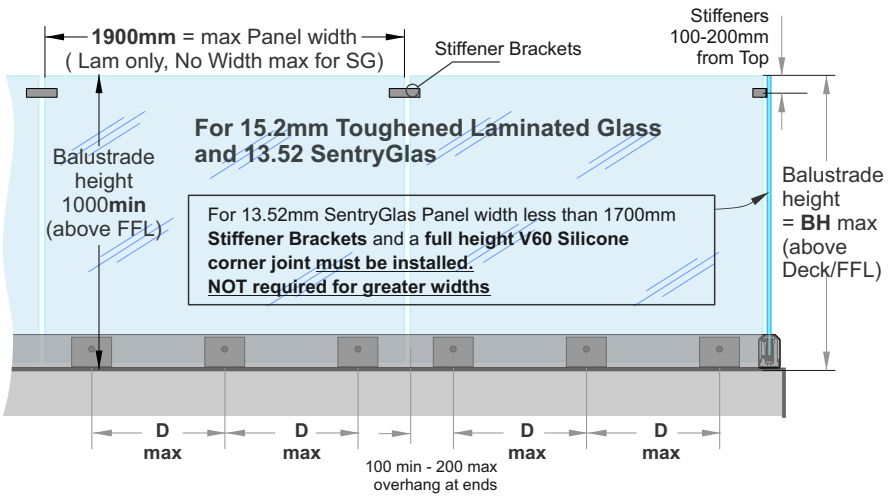

Exceeds the wind loading for all Wind Zones up to **and Including** **Very High Wind Zone** as set out in NZS 3604:2011

Refer to the Stiffener Bracket pages for conformance to NZS 4223.3.2016.

Edgetec Infinity® Glass Clamps
Top Fix + Stiffener Brackets

Glass must have a minimum strength of 100Mpa
All edges polished

Commercial Occupancy
types B, E, and C3 only

For 17.2mm Toughened Laminated Glass

- **D max 400mm**
- **BH max 1300mm**

For 17.52mm SentryGlas

- **D max 350mm**
- **BH max 1200mm**

Note: See individual Mounting pages for construction options

Max Tension load per Face fixing = 23kN

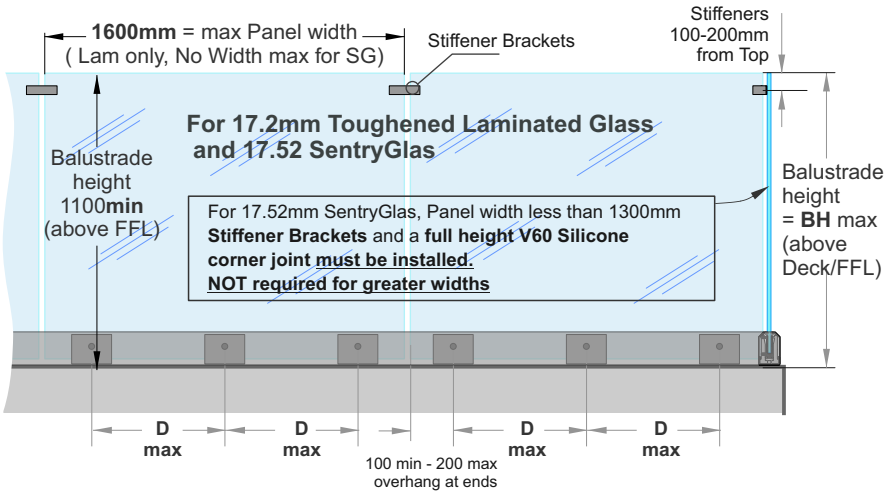

Exceeds the wind loading for all Wind Zones up to **and Including** **Extra High Wind Zone** as set out in NZS 3604:2011

Refer to the Stiffener Bracket pages for conformance to NZS 4223.3.2016.

SentryGlas® Glass Layers and Thickness Orientation

Glass Thickness (mm)	Inner Layer of Glass thickness (mm) Deckside	Interlayer thickness(mm) and Type	Outer Layer Glass thickness (mm)
13.52	6	1.52 SentryGlas®	6
17.52	8	1.52 SentryGlas®	8

Refers to previous page.
Laminated Glass Layers and Thickness Orientation

Glass Thickness (mm)	Inner Layer of Glass thickness (mm) Deckside	Interlayer thickness(mm) and Type	Outer Layer Glass thickness (mm)
15.2	8	1.2EVA	6
17.2	8	1.2EVA	8

Juralco Edgetec Infinity® Balustrade System
Top Fix General

Edgetec Infinity®
Glass Clamp - Top Fix
(12mm Glass Shown)

The Infinity Balustrade Clamp comes as a kit;
Clamp Extrusion, Front and Rear Gasket Extrusions
Gaskets, Glass bottom Packer and all adjusting screws.
(M12 Fastener not included)

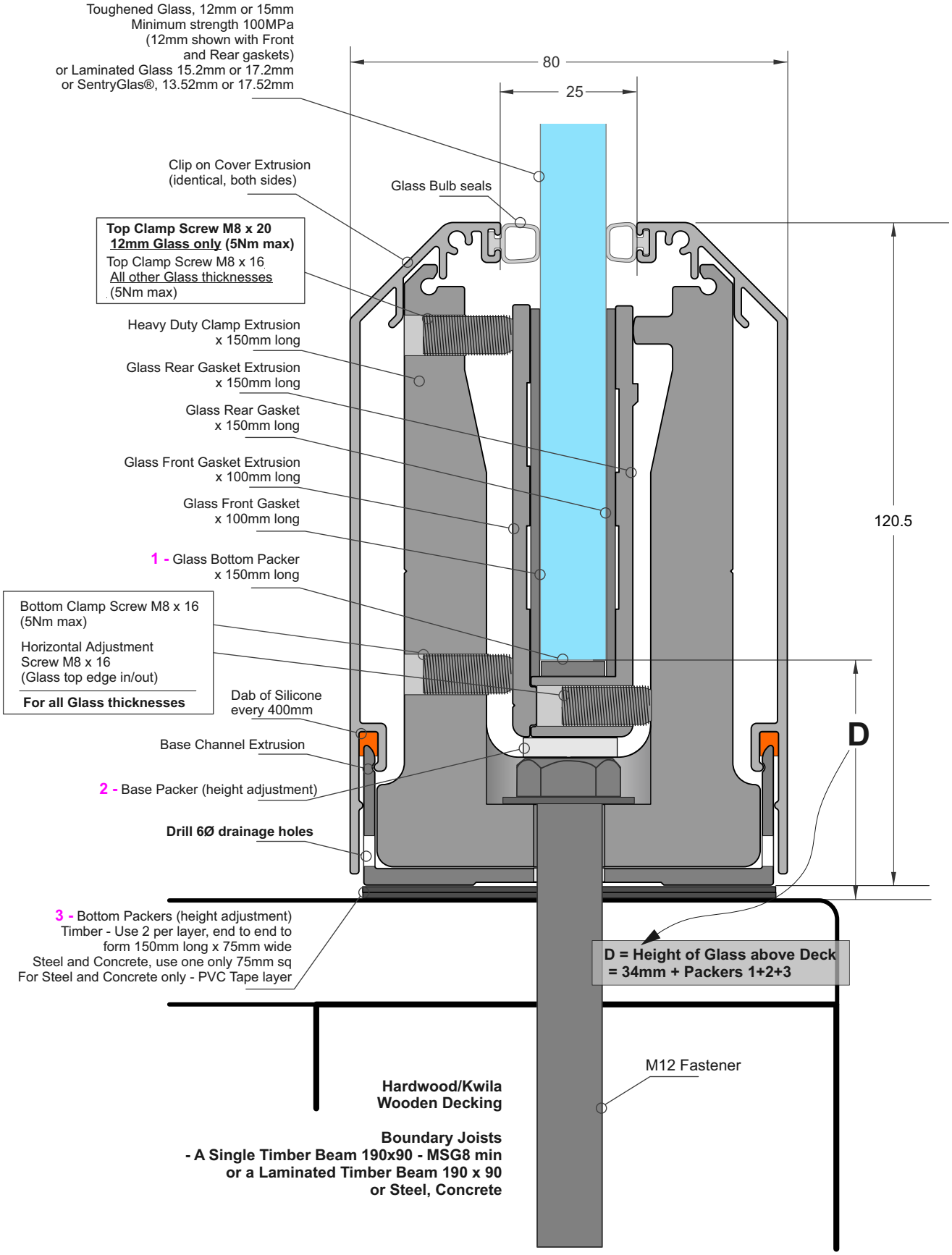

Elevation showing the Main Features

Juralco Edgetec Infinity® Balustrade System
Top Fix Components

Heavy Duty Clamp Extrusion
Part No JET/IBT/BODY

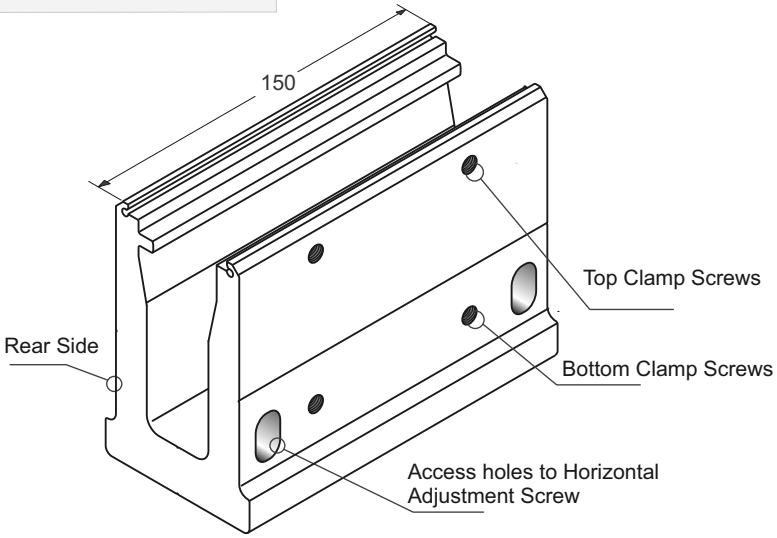

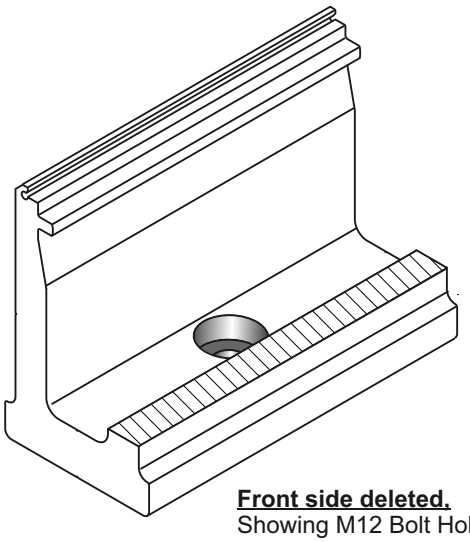

Front side deleted,
Showing M12 Bolt Hole in Base

Cover and Base Extrusion

Front and Back Cover Extrusions Identical

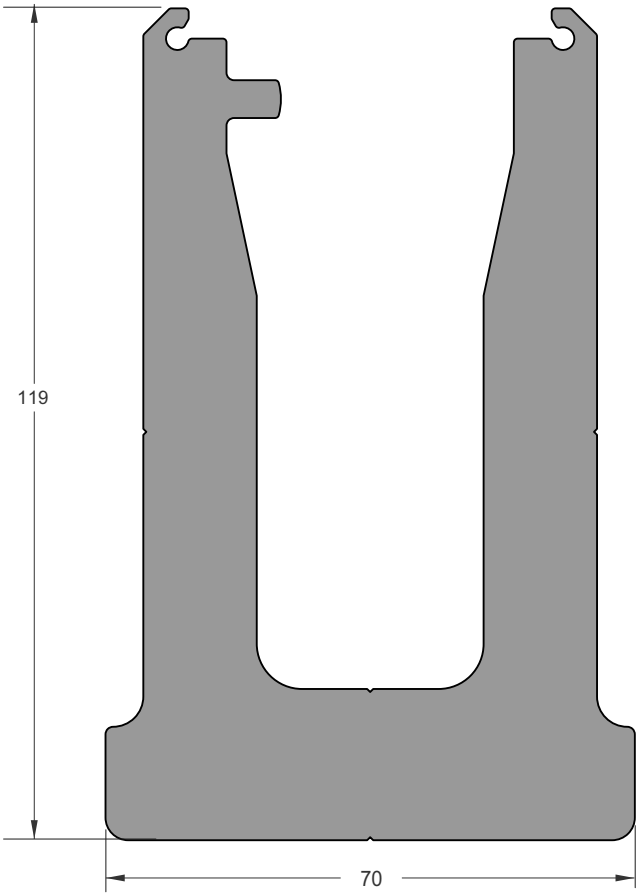

TOP MOUNT HEAVY DUTY
CLAMP EXTRUSION
PART NO JET/IBT/BODY

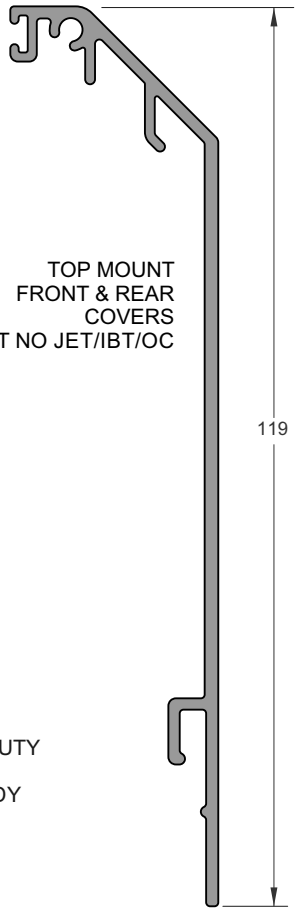

TOP MOUNT
FRONT & REAR
COVERS
PART NO JET/IBT/OC

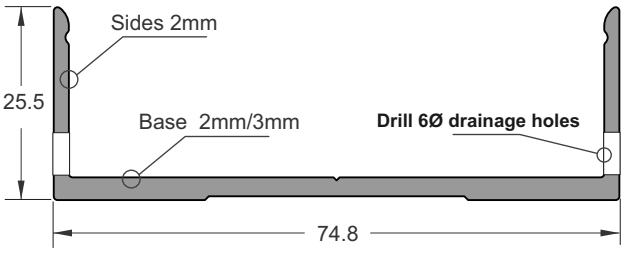

TOP MOUNT
BOTTOM CHANNEL
EXTRUSION
PART NO JET/IBT/BC

Juralco Edgetec Infinity® Balustrade System
Top Fix Components

Top Mount End Plate
Part No JET/IBT/EP

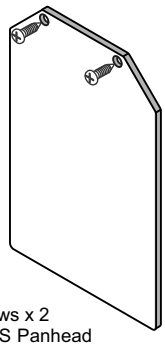

Attach Screws x 2
No 8 x 25 SS Panhead

Bottom Spacer Plates

Packers (height adjustment)
- Timber - Use 2 per layer, end to end to form 150mm long x 75mm wide
- Steel and Concrete, use one only 75mm sq

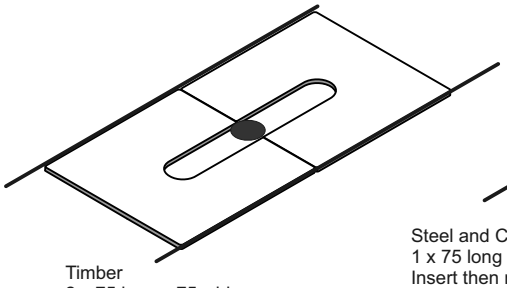

Timber
2 x 75 long x 75 wide

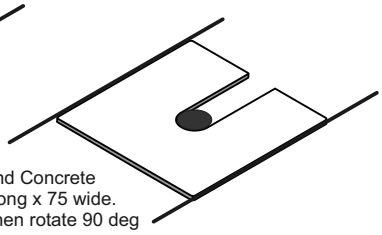

Steel and Concrete
1 x 75 long x 75 wide.
Insert then rotate 90 deg

1mm thick Plate - Part No JET/IBT/BSP1 5mm thick Plate - Part No JET/IBT/BSP5

Glass Gasket Extrusions
Front and Rear

Front 100 wide, Part No JET/IB/GS/12
Rear 150 wide, Part No JET/IB/GS/15

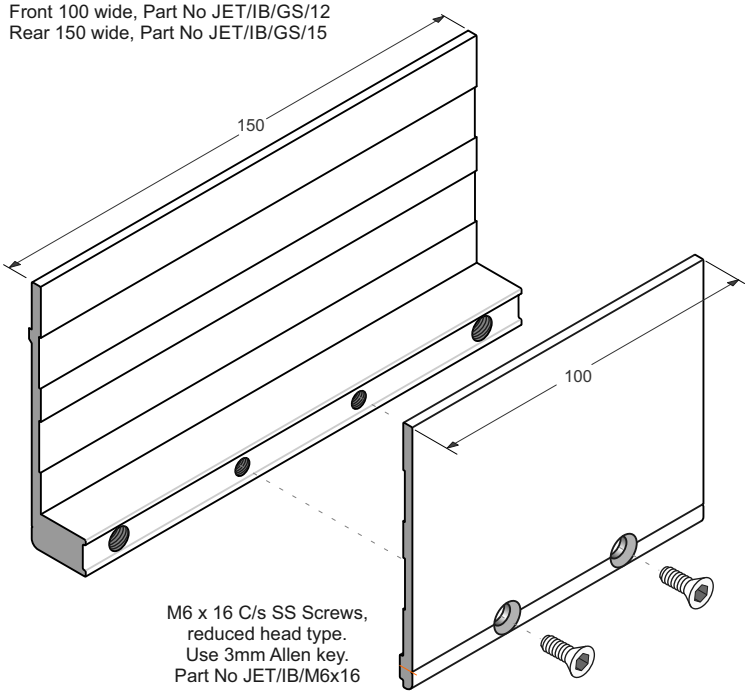

M6 x 16 C/s SS Screws,
reduced head type.
Use 3mm Allen key.
Part No JET/IB/M6x16

Glass Bulb Seal
Part No JET/IB/CVRBLB250

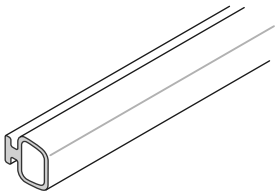

SIKA Supergrip 2hr
Part No JEC SUPERGRIP

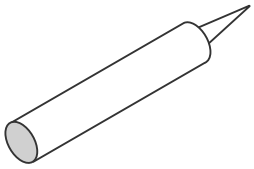

For All Coachscrews fixings

Rhodorsil V60 Clear Silicone
Part No H/RTV419098

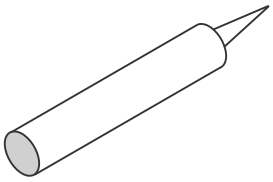

Construction Silicone

Glass Gaskets
1mm and 2mm

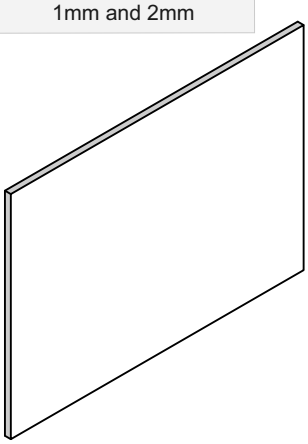

Gasket Schedule	
12mm Toughened	Use 2 x 2mm Gaskets
13.52mm SentryGlas	
15mm Toughened	Use 2 x 1mm Gaskets
15.2mm Laminated	
17.2mm Laminated	
17.52mm SentryGlas	

Gasket 2mm Thick	Front 100 wide, Part No JET/IB/GGF2 Rear 150 wide, Part No JET/IB/GGR2

Gasket 1mm Thick	Front 100 wide, Part No JET/IB/GGF1 Rear 150 wide, Part No JET/IB/GGR1

Typical TOP Fix to Timber, Single Joist - M12 SS Coachscrew

Complies with NZS3604:2011 - Single Boundary Joist

Up to and including Very High Wind Zone Residential A, A Other and C3 only		
Glass Thickness, Type	Balustrade Height (max)	Clamp Spacing (max)
12 T	1200	500
15.2 L	1150	500
13.52SG	1050	350

Up to and including Extra High Wind Zone Commercial B, E and C3 only		
Glass Thickness, Type	Balustrade Height (max)	Clamp Spacing (max)
15 T	1300	400
17.2 L	1300	400
17.52SG	1200	350

Height/Spacings for this mounting type only

Up to and including Very High Wind Zone Pool Fence only		
Glass Thickness, Type	Fence Height (max)	Clamp Spacing (max)
12T	1250	500

Up to and including Extra High Wind Zone Pool Fence only		
Glass Thickness, Type	Fence Height (max)	Clamp Spacing (max)
15T	1250	500

Applies to Pool Fences not protecting a fall of 1.0m or more

General Notes:
1 - Glass thickness, mm
Glass type T= Toughened, L = Laminated, SG = SentryGlas
2 - All measurements mm
3 - Refer to Elevations for Max Panel widths.
Use of Top Interlinking Rails (T and L only) or Stiffener Brackets (L and SG only)

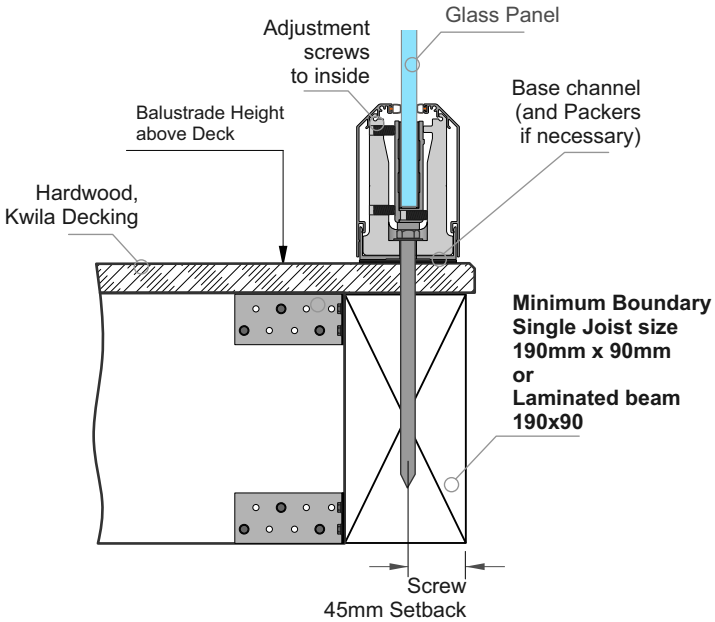

Important Installation notes:
1 - The Project Engineer must ensure the structure can support the appropriate loads
2 - Substructure shown indicatively only. Timber SG8 minimum strength
3 - Coachscrews 150mm min engagement into joists, predrill 6mm holes.
4 - Bond all coachscrews with SIKA Supergrip to full depth
5 - All Fixings must be Stainless steel

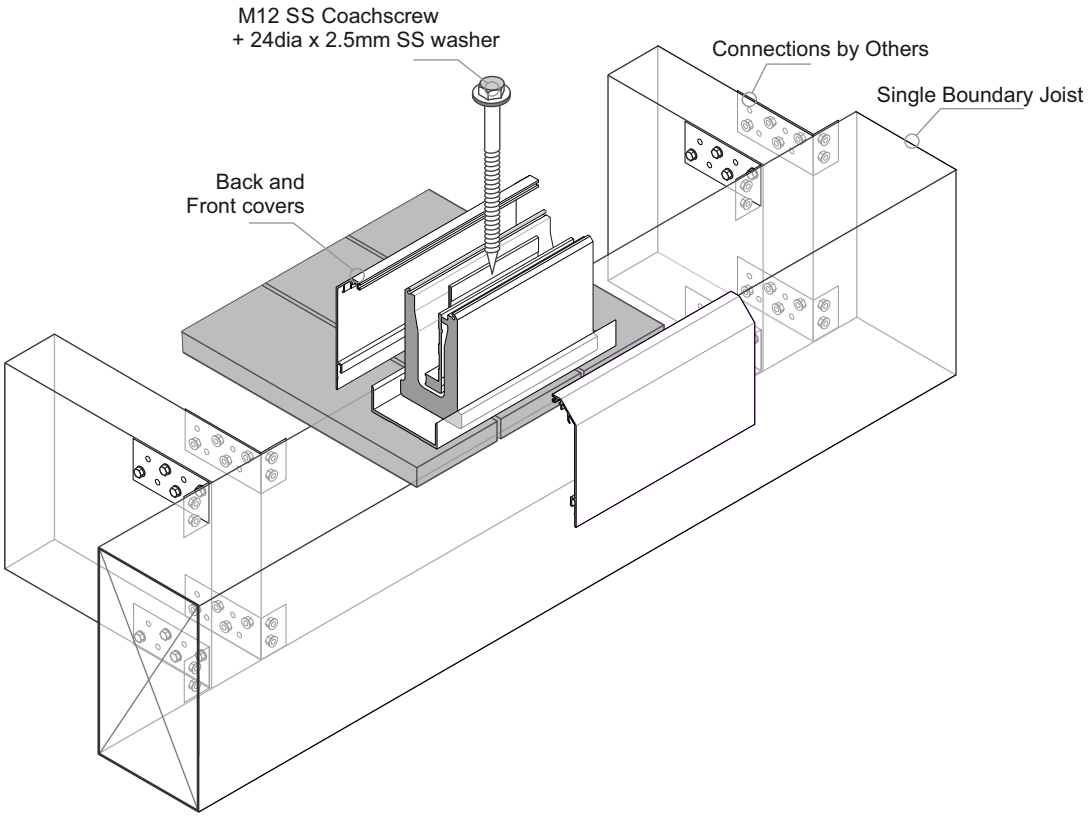

Typical TOP Fix to Timber, Triple Joist - M12 SS Coachscrew

Complies with NZS3604:2011 - Triple Boundary Joist

Up to and including Very High Wind Zone Residential A, A Other and C3 only			Up to and including Extra High Wind Zone Commercial B, E and C3 only		
Glass Thickness, Type	Balustrade Height (max)	Clamp Spacing (max)	Glass Thickness, Type	Balustrade Height (max)	Clamp Spacing (max)
12 T	1200	500	15 T	1300	400
15.2 L	1150	500	17.2 L	1300	400
13.52SG	1050	350	17.52SG	1200	350

Height/Spacings for this mounting type only

Up to and including Very High Wind Zone Pool Fence only			Up to and including Extra High Wind Zone Pool Fence only		
Applies to Pool Fences not protecting a fall of 1.0m or more					
Glass Thickness, Type	Fence Height (max)	Clamp Spacing (max)	Glass Thickness, Type	Fence Height (max)	Clamp Spacing (max)
12T	1250	500	15T	1250	500

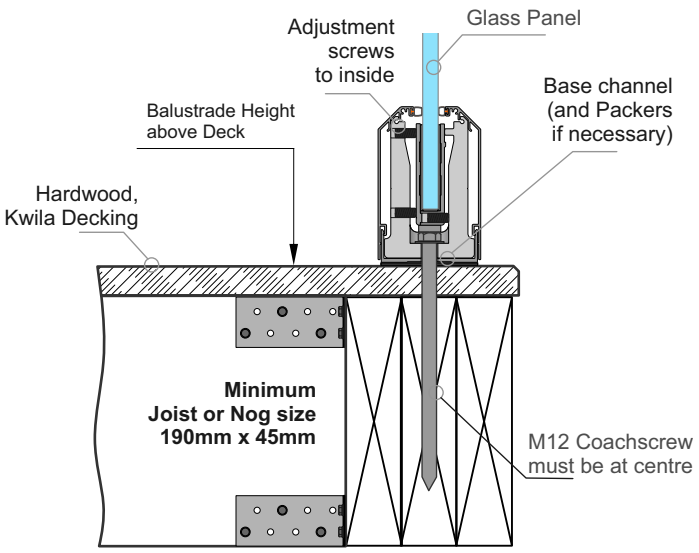

General Notes:
1 - Glass thickness, mm
Glass type T= Toughened, L = Laminated, SG = SentryGlas
2 - All measurements mm
3 - Refer to Elevations for Max Panel widths.
Use of Top Interlinking Rails (T and L only) or Stiffener Brackets (L and SG only)

Important Installation notes:
1 - The Project Engineer must ensure the structure can support the appropriate loads
2 - Substructure shown indicatively only. Timber SG8 minimum strength
3 - Coachscrews 150mm min engagement into joists, predrill 6mm holes.
4 - Bond all coachscrews with SIKA Supergrip to full depth
5 - All Fixings must be Stainless steel

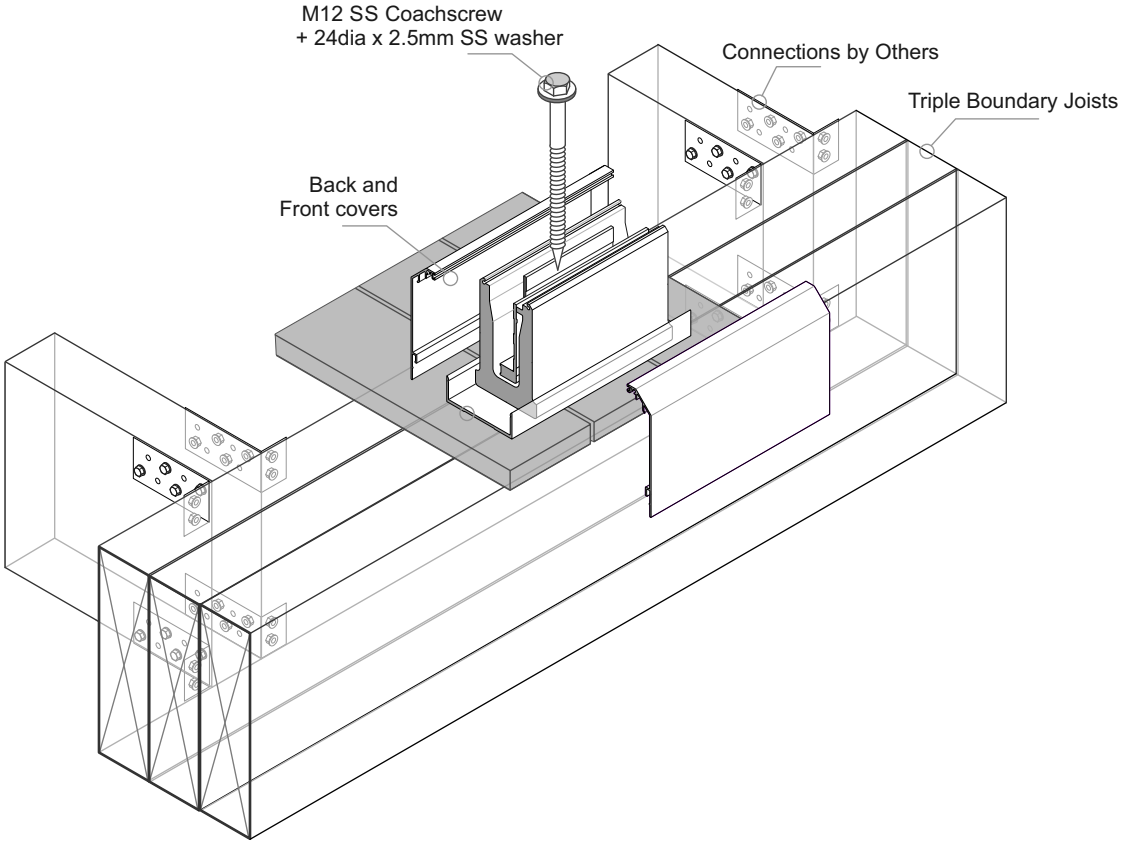

Typical TOP Fix to Steel + Timber Deck - M12 SS, Bolt or Threaded Rod

Up to and including Very High Wind Zone Residential A, A Other and C3 only			Up to and including Extra High Wind Zone Commercial B, E and C3 only		
Glass Thickness, Type	Balustrade Height (max)	Clamp Spacing (max)	Glass Thickness, Type	Balustrade Height (max)	Clamp Spacing (max)
12 T	1200	500	15 T	1300	400
15.2 L	1150	500	17.2 L	1300	400
13.52SG	1050	350	17.52SG	1200	350

Height/Spacings for this mounting type only

Up to and including Very High Wind Zone Pool Fence only			Up to and including Extra High Wind Zone Pool Fence only		
Applies to Pool Fences not protecting a fall of 1.0m or more					
Glass Thickness, Type	Fence Height (max)	Clamp Spacing (max)	Glass Thickness, Type	Fence Height (max)	Clamp Spacing (max)
12T	1250	500	15T	1250	500

General Notes:
1 - Glass thickness, mm
Glass type T= Toughened, L = Laminated, SG = SentryGlas
2 - All measurements mm
3 - Refer to Elevations for Max Panel widths.
Use of Top Interlinking Rails (T and L only) or Stiffener Brackets (L and SG only)

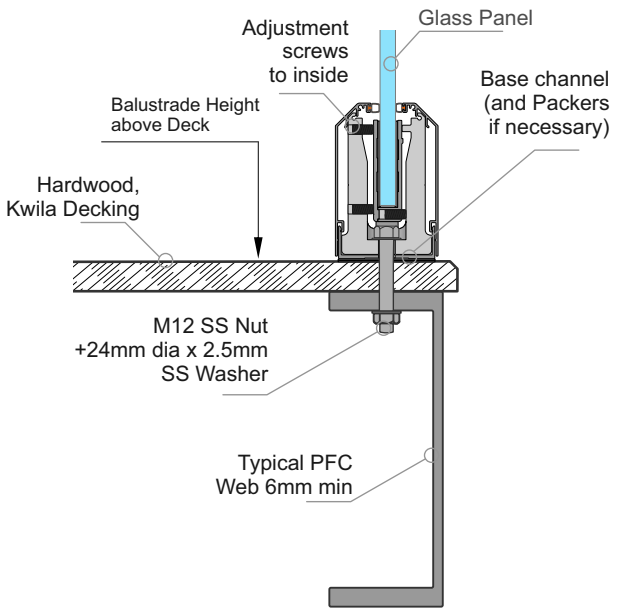

Important Installation notes:
1 - The Project Engineer must ensure the structure can support the appropriate loads
2 - Substructure shown indicatively only
3 - All fixings must be Stainless Steel

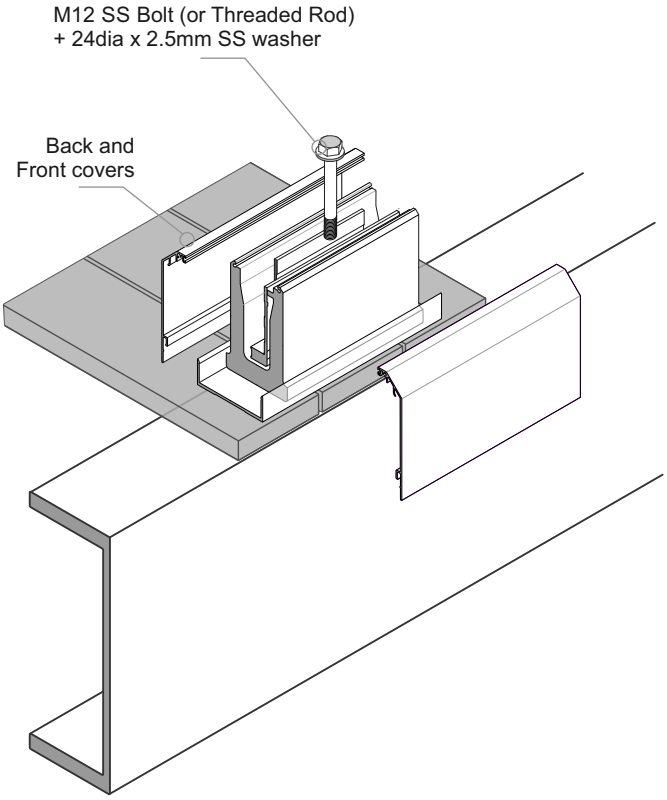

Typical TOP Fix directly to Steel - M12 SS, Bolt or Threaded Rod

Up to and including Very High Wind Zone Residential A, A Other and C3 only		
Glass Thickness, Type	Balustrade Height (max)	Clamp Spacing (max)
12 T	1200	500
15.2 L	1150	500
13.52SG	1050	350

Up to and including Extra High Wind Zone Commercial B, E and C3 only		
Glass Thickness, Type	Balustrade Height (max)	Clamp Spacing (max)
15 T	1300	400
17.2 L	1300	400
17.52SG	1200	350

Height/Spacings for this mounting type only

Up to and including Very High Wind Zone Pool Fence only		
Glass Thickness, Type	Fence Height (max)	Clamp Spacing (max)
12T	1250	500

Up to and including Extra High Wind Zone Pool Fence only		
Glass Thickness, Type	Fence Height (max)	Clamp Spacing (max)
15T	1250	500

Applies to Pool Fences not protecting a fall of 1.0m or more

General Notes:
1 - Glass thickness, mm
Glass type T= Toughened, L = Laminated, SG = SentryGlas
2 - All measurements mm
3 - Refer to Elevations for Max Panel widths.
Use of Top Interlinking Rails (T and L only) or Stiffener Brackets (L and SG only)

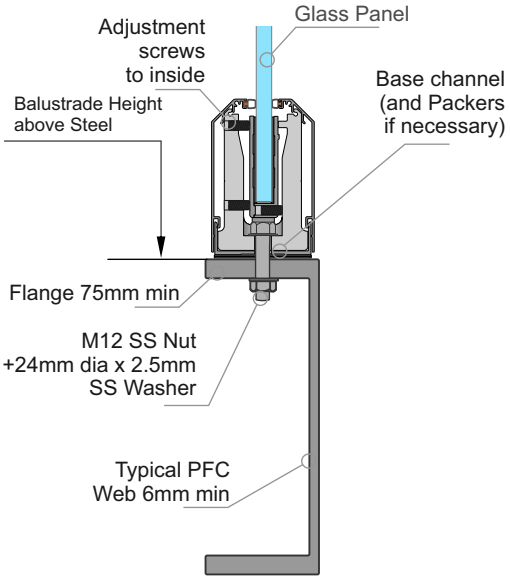

Important Installation notes:
1 - The Project Engineer must ensure the structure can support the appropriate loads
2 - An PVC Tape layer must be installed between the Base Channel and Steel
3 - All fixings must be Stainless Steel

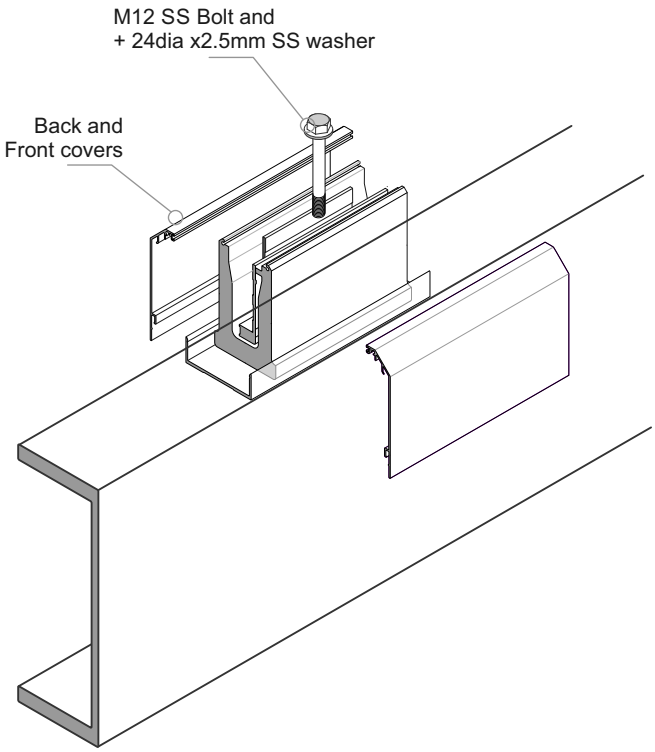

Typical TOP Fix to Concrete - M12 SS Threaded Rod Stud

Up to and including Very High Wind Zone Residential A, A Other and C3 only			Up to and including Extra High Wind Zone Commercial B, E and C3 only		
Glass Thickness, Type	Balustrade Height (max)	Clamp Spacing (max)	Glass Thickness, Type	Balustrade Height (max)	Clamp Spacing (max)
12 T	1200	500	15 T	1300	400
15.2 L	1150	500	17.2 L	1300	400
13.52SG	1050	350	17.52SG	1200	350

Height/Spacings for this mounting type only

Up to and including Very High Wind Zone Pool Fence only			Up to and including Extra High Wind Zone Pool Fence only		

Applies to Pool Fences not protecting a fall of 1.0m or more

Glass Thickness, Type	Fence Height (max)	Clamp Spacing (max)	Glass Thickness, Type	Fence Height (max)	Clamp Spacing (max)
12T	1250	500	15T	1250	500

General Notes:
1 - Glass thickness, mm
Glass type T= Toughened, L = Laminated, SG = SentryGlas
2 - All measurements mm
3 - Refer to Elevations for Max Panel widths.
Use of Top Interlinking Rails (T and L only) or Stiffener Brackets (L and SG only)

Installation details Fischer FIS V 300T

Thread diameter	M12
Drill hole diameter	= 14 mm
Drill hole depth	= 135 mm
Anchorage depth	= 125 mm
Drilling method	Hammer drilling
Drill hole cleaning	4 times blowing, 4 times brushing, 4 times blowing

No borehole cleaning required in case of using a hollow drill bit, e.g. fischer FHD.

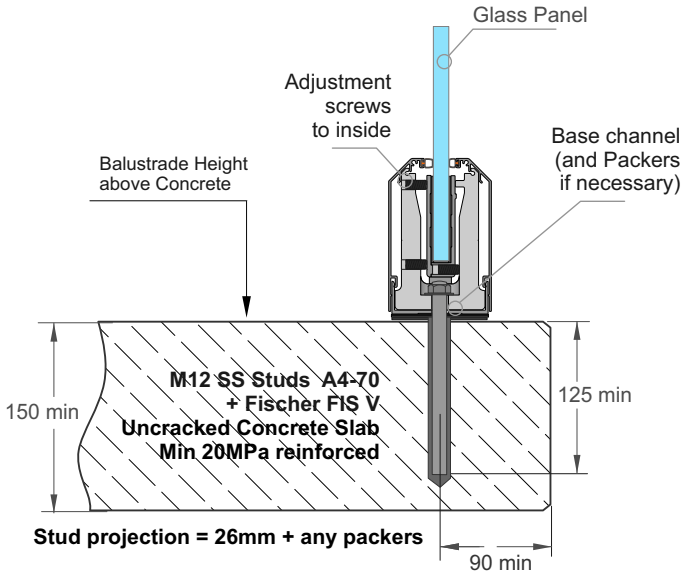

Important Installation Notes:
1 - The Project Engineer must ensure the structure can support the appropriate loads
2 - Substructure shown indicatively only
3 - Fixings must engage into the structural slab
4 - A PVC Tape layer must be installed between the Base Channel and Concrete
5 - Use Threadlok on Nut
6 - All fixings must be Stainless Steel

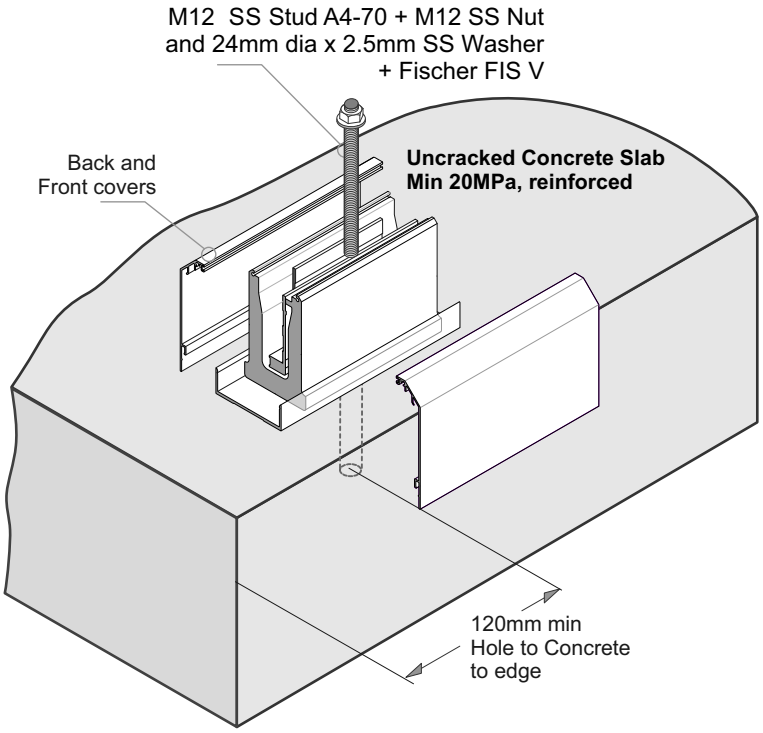

These Top Fix Installation Recommendations apply to all Substrates

Infinity Balustrade Top Fix Installation procedure on a Timber Deck. The Clamps must be Plumb and in Line

1 - Place Channel on deck. Lightly screw in position with 8g SS C/s screws, in a straight line.
2 - Measure vertical height to deck at ea attach point. Calculate spacers needed to bring channel level (1mm and 5mm)
3 - Set heights with spacers, including a PVC Tape layer to Deck (Steel and Concrete).
Tighten 8g C/s SS screws to firmly locate channel on deck. Channel should now be firm, level and straight
4 - Mark out position of Clamps (normally at Glass Panel joints). Pre drill Deck for appropriate fastener, through channel.
5 - Place Clamps in place (adjust screws to inside).Fasten all down very firmly. **Clamps must be Plumb and in Line**
6 - Place Front cover in place, incl bulb seal. Lightly crimp bottom tag, and a dab of V60 silicone at top.

---

7 - Fit Glass into position inside the Clamps, using appropriate Gasket combinations.
As the channel is already level, there are no provision for Glass vertical adjustment
8 - Lightly nip the top 2 grub screws on the HD clamp to hold the glass vertical.
9 - Adjust the 4 lower grub screws on the HD clamp and Glass clamp assemblies for top edge Horizontal alignment
10 - When glass panels are in the correct position tighten top and bottom clamp screws on HD clamp (5.0Nm max)

---

11 - Install Rear cover incl bulb seal. Lightly crimp bottom tag, and a dab of V60 silicone at top.
12 - Fit End plates as required
.

Fitting Stages 1 - 6 to get Clamp Plumb, both Vertical and Horizontal

Fitting Stages 7 - 10 to get Glass Plumb, both Vertical and Horizontal

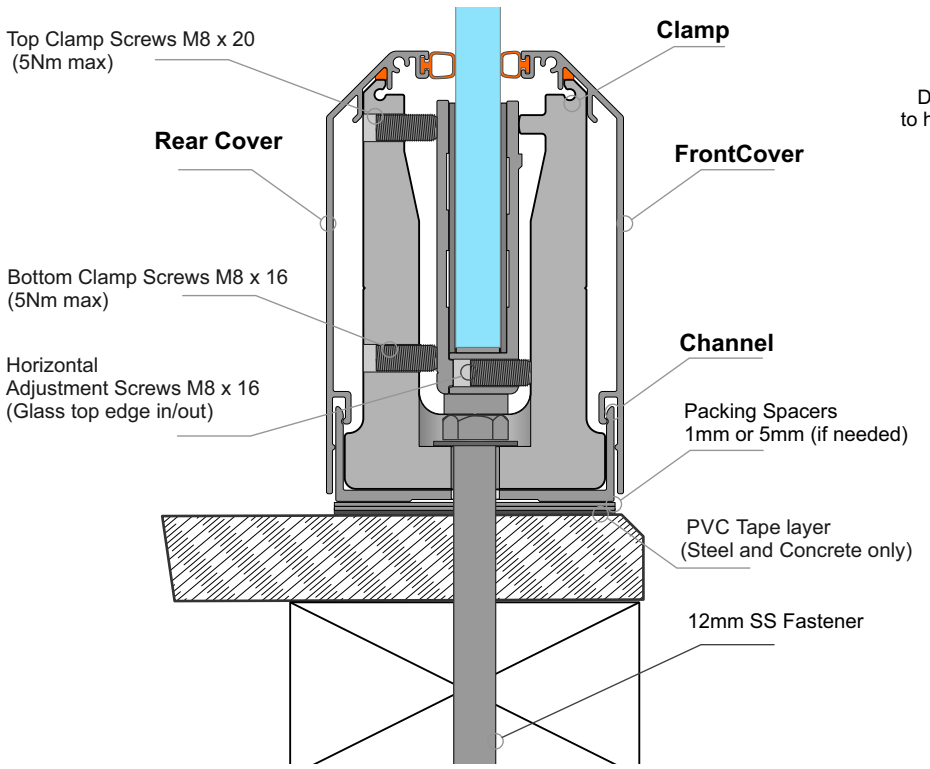

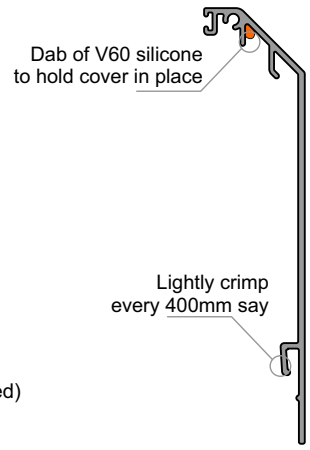

Before installing Front or Rear Covers

Juralco 38mm Rectangular Interlinking Top Rail

This page applies to 12mm and 15mm Toughened Glass only

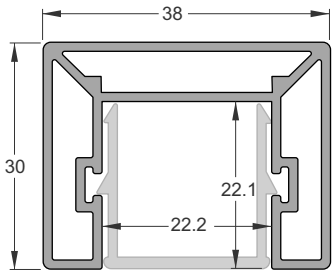

Rectangular Interlinking Top Rail
JET/220/5.8
Also showing Infill Clip, for
use in between Glass Panels

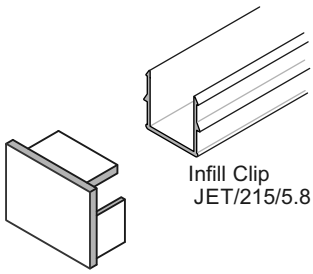

Interlinking Top
Rail End Cap
JET 37

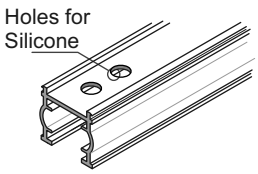

Interlinking Top Rail Gasket
for 12 mmToughened Glass
JET/Gasket 12/2.9

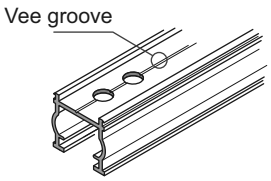

Interlinking Top Rail Gasket
for 15 mmToughened Glass
JET /Gasket 15/2.9

---

1 - 12, 15mm Glass and Gasket

Application Notes:
- Cut short lengths of Gasket (50mm) and place say every 700mm.
- Cut/adjust Interlinking rail to correct dimensions, test in place.
- Remove all, install full cut lengths of Gasket to glass top edge

- Assemble Top Rail + Joiners and suitable End plates

- Place blobs of V60 silicone in every Gasket hole
- Then place Top Rail extrusion + Joiners and End plates in place clipping firmly to Gasket
- Tape all down, wait 24 hrs to fully bond. Clean up.

Note: Ends must be attached to structure or post,
- Joins must have a suitable joiner plate

12mm Glass and Gasket shown

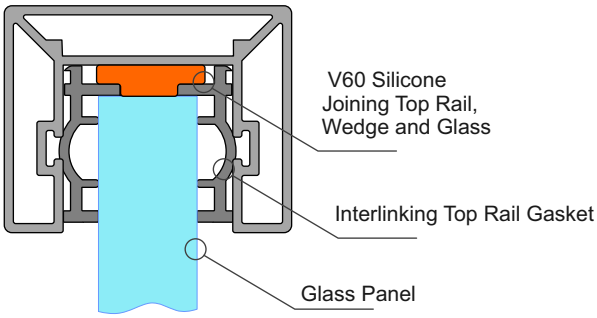

---

2 - End Plate Brackets

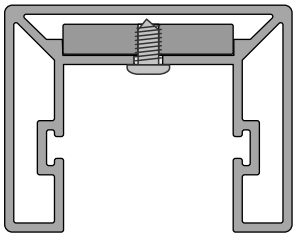

End Plate
Tabs all 22.5 x 4mm SS.

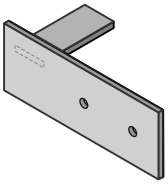

Interlinking Top Rail
Wall type End Plate
SS. 120x45mm
JET 40LH

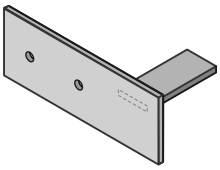

Interlinking Top Rail
Wall type End Plate
SS. 120x45mm
JET 40RH

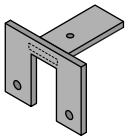

Interlinking Top Rail
End Bracket
SS. 60mm x 46mm
JET 42

(After cutting extrusions to length) - With End Plate in place, spot drill from below for position-
- Drill out to SS tab to 3mm dia, extrusion to 4mm dia - Use No 6 x 1/4in SS ST Pan sq drive Screw, @ 2 per plate - End Plate must be securely attached to Post or structure.

---

3 - Joiners

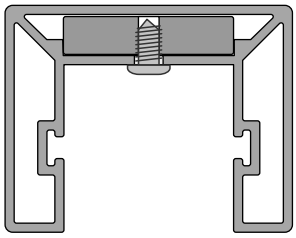

Joiners
22.5 x 5mm Aluminium

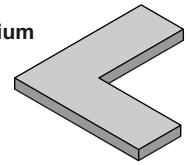

Interlinking Top Rail
Corner Joiner
75x75x5mm
JET 31

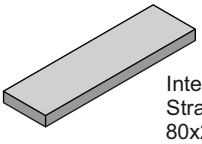

Interlinking Top Rail
Straight Joiner
80x22.8x5mm
JET 30

(After cutting extrusions to length) - With Joiner in place, spot drill from below for position
- Drill out to Joiner to 3mm dia, extrusion to 4mm dia
- Use No 6 x 1/4in SS ST Pan sq drive Screw, @ 2 per plate

Important Note: All Interlinking rails, at their ends must be attached to a Building Structure or to an Edge Post attached to the Deck structure, using Rail End Plates/Brackets

Juralco 38mm Rectangular Interlinking Top Rail

This Page applies to 15.2mm and 17.2mm Laminated Safety Glass only

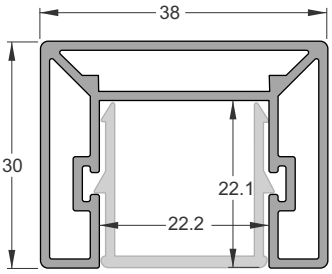

Rectangular Interlinking Top Rail
JET/220/5.8
Also showing Infill Clip, for
use in between Glass Panels

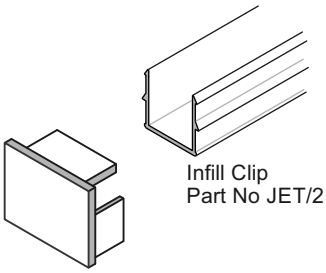

Infill Clip
Part No JET/215/5.8

Interlinking Top
Rail End Cap
JET 37

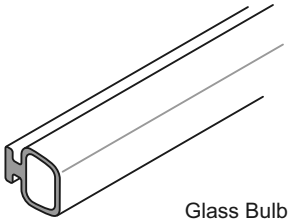

Glass Bulb Seal
Part No JET/IB/CVRBLB250

---

1 - 15.2, 17.2mm Glass and Gasket

Application Notes:
- Assemble Top Rail + Joiners and suitable End plates
- Place Full lengths of Bulb seal in place.

- Place blobs of V60 silicone along top edge of Glass
  at similar spacings to Gasket on previous page.
- Then place Top Rail extrusion and bulb seals firmly onto Glass.
- Tape all down, wait 24 hrs to fully bond. Clean up.

Note: Ends must be attached to structure or post,
- Joins must have a suitable joiner plate

15.2mm Glass and Gasket shown

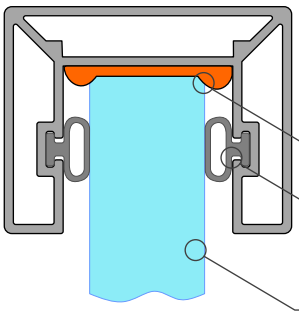

---

2 - End Plate Brackets

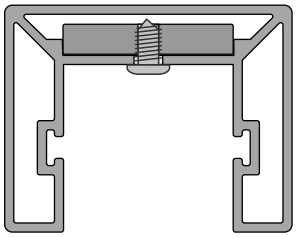

End Plate
Tabs all 22.5 x 4mm SS.

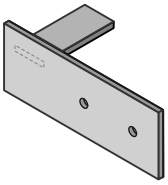

Interlinking Top Rail
Wall type End Plate
SS. 120x45mm
JET 40LH

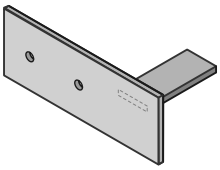

Interlinking Top Rail
Wall type End Plate
SS. 120x45mm
JET 40RH

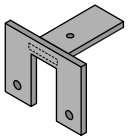

Interlinking Top Rail
End Bracket
SS. 60mm x 46mm
JET 42

(After cutting extrusions to length) - With End Plate in place, spot drill from below for position-
- Drill out to SS tab to 3mm dia, extrusion to 4mm dia - Use No 6 x 1/4in SS ST Pan sq drive Screw,
  @ 2 per plate - End Plate must be securely attached to Post or structure.

---

3 - Joiners

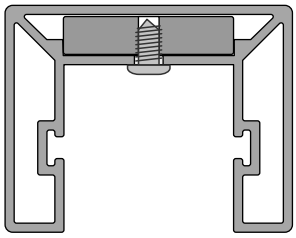

Joiners
22.5 x 5mm Aluminium

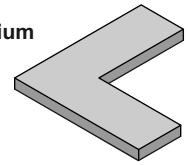

Interlinking Top Rail
Corner Joiner
75x75x5mm
JET 31

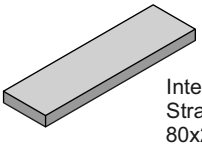

Interlinking Top Rail
Straight Joiner
80x22.8x5mm
JET 30

(After cutting extrusions to length) - With Joiner in place, spot drill from below for position
- Drill out to Joiner to 3mm dia, extrusion to 4mm dia
- Use No 6 x 1/4in SS ST Pan sq drive Screw, @ 2 per plate

Important Note: All Interlinking rails, at their ends must be attached to a Building Structure or to an Edge Post attached to the Deck structure, using Rail End Plates/Brackets

1 - Connectors

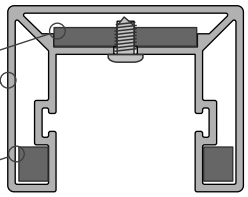

Swivel Kits: (After cutting extrusions to length)
- With Swivel in place, spot drill from below for position
- Drill out Swivel to 3mm dia, extrusion to 4mm dia
- Use No6 x 1/4in SS ST Pan sq drive screws, 2 x ea side of joint
- Both sides must be attached.
- Join together with the M6 x 25 C/S SS Screw

Interlinking Top Rail
Horizontal Fixed
90 deg Connector
JET 45A

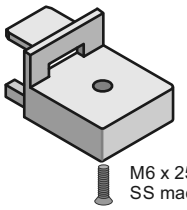

Interlinking Top Rail
Horizontal Fixed
90 deg Connector
JET 45B

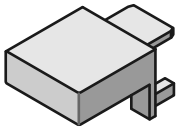

Rectangular Interlinking Top Rail
Horizontal Fixed 90deg Kit
JET220/90deg Corner Kit
(JET 45A and B + screw)

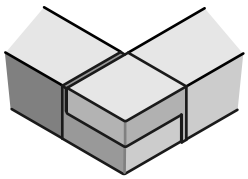

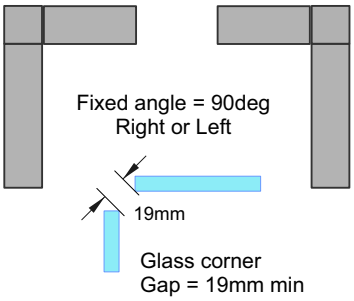

Interlinking Top Rail
Horizontal 0 - 90deg
Swivel Connector
JET 46A

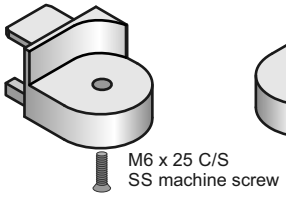

Interlinking Top Rail
Horizontal 0 - 90deg
Swivel Connector
JET 46B

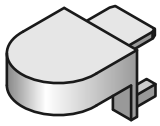

Rectangular Interlinking Top Rail
Horizontal 0 - 90 deg Right/Left
Swivel Connector Kit
JET220/Horizontal Adj Corner Kit
(JET 46A and B + screw)

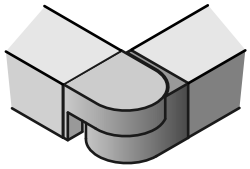

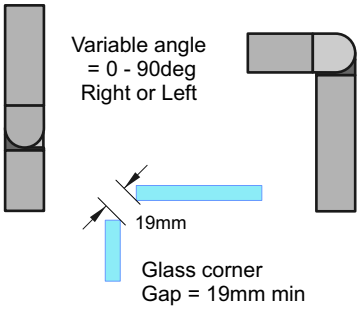

Interlinking Top Rail
Vertical 35deg up
to 35 deg down
Swivel Connector
JET 47A

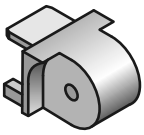

M6 x 25 C/S
SS machine screw

Interlinking Top Rail
Vertical 35deg up
to 35 deg down
Swivel Connector
JET 47B

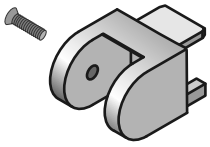

Interlinking Top Rail Vertical 35deg up
to 35 deg down. Swivel Connector Kit
JET220/Vertical Adj Corner Kit
(JET 47A and B + screw)

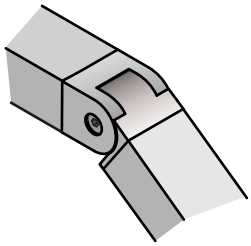

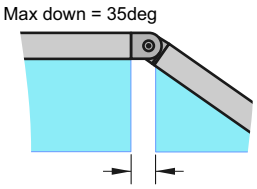

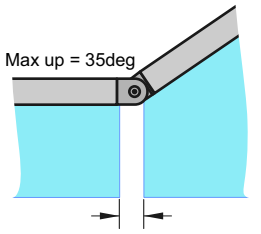

2 - Joiners

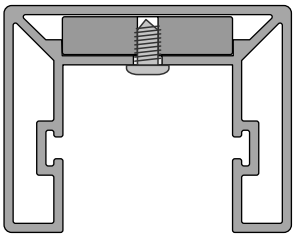

Joiners: (After cutting extrusions to length)
- With Joiner in place, spot drill from below for position
- Drill out to joiner to 3mm dia, extrusion to 4mm dia
- Use No 6 x 1/4in SS ST Pan sq drive screws, 2 x ea side of joint
- Both ends must be attached.
- Joins, where required must be at the end of Glass Panels

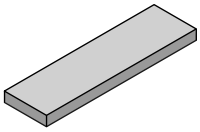

Interlinking Top Rail
Straight Joiner
80x22.8x5mm
JET 30

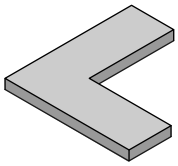

Interlinking Top Rail
Corner Joiner
75x75x5mm
JET 31

Joiners both 22.5 x 5mm Aluminium

Juralco 50mm Round Interlinking Top Rail

This page applies to 12mm and 15mm Toughened Glass only

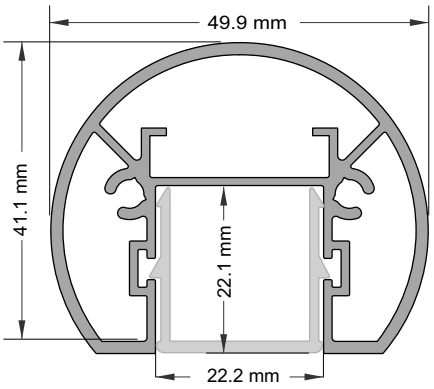

Round Interlinking Top Rail
JET/211/5.8
Also showing Infill Clip, for
use in between Glass Panels

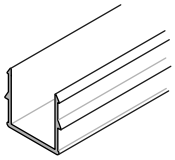

Infill Clip
Part No JET/215/5.8

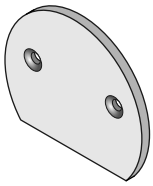

Round Interlinking
Top Rail End Cap
JET/231

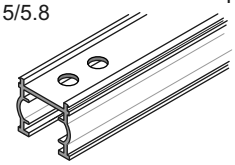

Interlinking Top Rail Gasket
for 12 mmToughened Glass
JET /Gasket 12/2.9

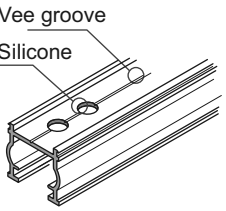

Interlinking Top Rail Gasket
for 15 mmToughened Glass
JET /Gasket 15/2.9

1 - 12, 15mm Glass and Gasket

Application Notes:
- Cut short lengths of Gasket (50mm) and place say every 700mm.
- Cut/adjust Interlinking rail to correct dimensions, test in place.
- Remove all, install full cut lengths of Gasket to glass top edge

- Assemble Top Rail + Joiners and suitable End plates

- Place blobs of V60 silicone in every Gasket hole
- Then place Top Rail extrusion + Joiners and End plates in place clipping firmly to Gasket
- Tape all down, wait 24 hrs to fully bond. Clean up.

Note: Ends must be attached to structure or post,
- Joins must have a suitable joiner plate

12mm Glass and Gasket shown

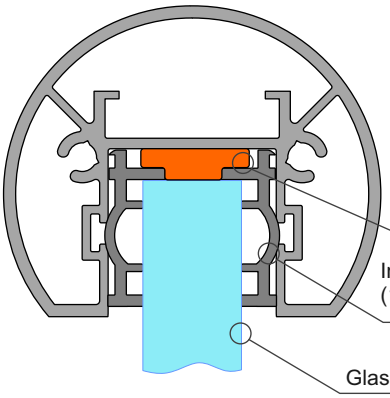

2 - End Plate Brackets

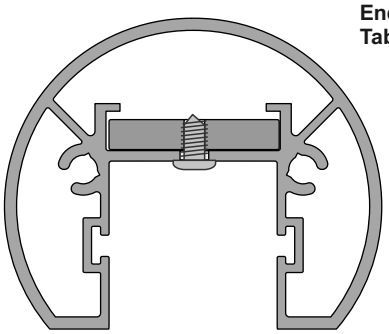

End Plate
Tabs all 22.5 x 4mm SS.

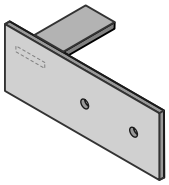

Interlinking Top Rail
Wall type End Plate
SS. 120x45mm
JET 40LH

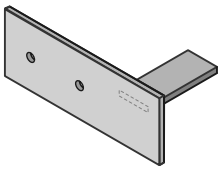

Interlinking Top Rail
Wall type End Plate
SS. 120x45mm
JET 40RH

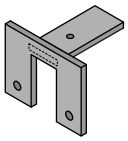

Interlinking Top Rail
End Bracket
SS. 60mm x 46mm
JET 42

(After cutting extrusions to length) - With End Plate in place, spot drill from below for position
- Drill out to SS tab to 3mm dia, extrusion to 4mm dia - Use No 6 x 1/4in SS ST Pan sq drive Screw, @ 2 per plate - End Plate must be securely attached to Post or structure.

3 - Joiners

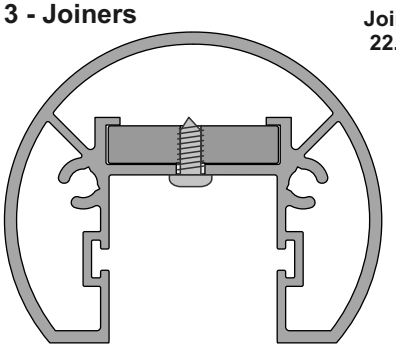

Joiners
22.5 x 5mm Aluminium

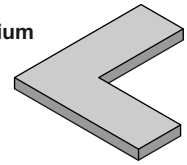

Interlinking Top Rail
Corner Joiner
75x75x5mm
JET 31

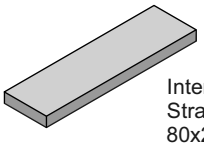

Interlinking Top Rail
Straight Joiner
80x22.8x5mm
JET 30

(After cutting extrusions to length) - With Joiner in place, spot drill from below for position
- Drill out to Joiner to 3mm dia, extrusion to 4mm dia
- Use No 6 x 1/4in SS ST Pan sq drive Screw, @ 2 per plate

Important Note: All Interlinking rails, at their ends must be attached to a Building Structure or to an Edge Post attached to the Deck structure, using Rail End Plates/Brackets

Juralco 50mm Round Interlinking Top Rail

This Page applies to 15.2mm and 17.2mm Laminated Safety Glass only

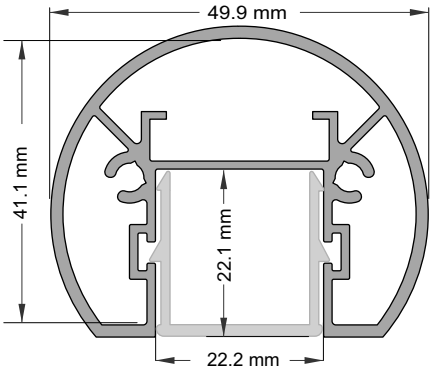

Round Interlinking Top Rail
JET/211/5.8
Also showing Infill Clip, for use in between Glass Panels

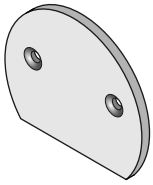

Round Interlinking Top Rail End Cap
JET 231

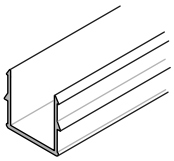

Infill Clip
JET/215/5.8

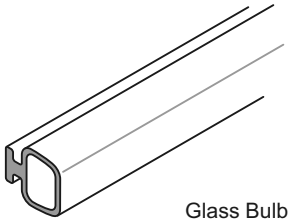

Glass Bulb Seal
JET/IB/CVRBLB250

---

1 - 15.2, 17.2mm Glass and Gasket

Application Notes:
- Assemble Top Rail + Joiners and suitable End plates
- Place Full lengths of Bulb seal in place.

- Place blobs of V60 silicone along top edge of Glass at similar spacings to Gasket on previous page.
- Then place Top Rail extrusion and bulb seals firmly onto Glass.
- Tape all down, wait 24 hrs to fully bond. Clean up.

Note: Ends must be attached to structure or post,
- Joins must have a suitable joiner plate

15.2mm Glass and Gasket shown

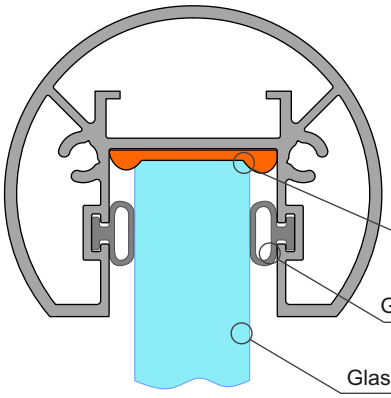

---

2 - End Plate Brackets

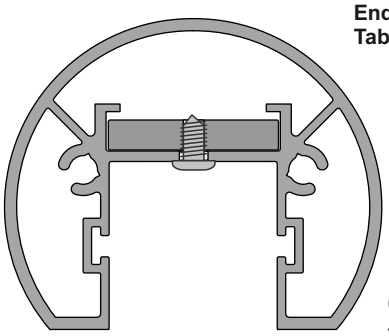

End Plate Tabs all 22.5 x 4mm SS.

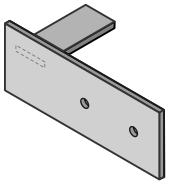

Interlinking Top Rail
Wall type End Plate
SS. 120x45mm
JET 40LH

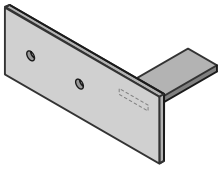

Interlinking Top Rail
Wall type End Plate
SS. 120x45mm
JET 40RH

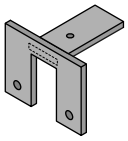

Interlinking Top Rail
End Bracket
SS. 60mm x 46mm
JET 42

(After cutting extrusions to length) - With End Plate in place, spot drill from below for position
- Drill out to SS tab to 3mm dia, extrusion to 4mm dia - Use No 6 x 1/4in SS ST Pan sq drive Screw, @ 2 per plate - End Plate must be securely attached to Post or structure.

---

3 - Joiners

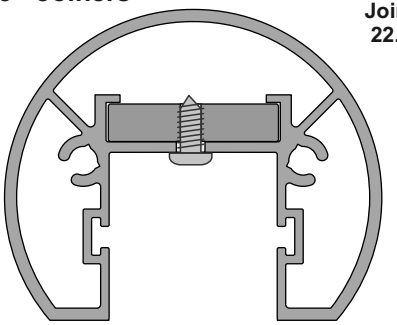

Joiners 22.5 x 5mm Aluminium

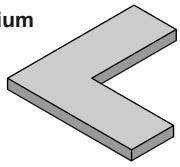

Interlinking Top Rail
Corner Joiner
75x75x5mm
JET 31

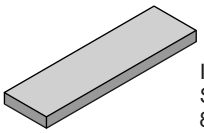

Interlinking Top Rail
Straight Joiner
80x22.8x5mm
JET 30

(After cutting extrusions to length) - With Joiner in place, spot drill from below for position
- Drill out to Joiner to 3mm dia, extrusion to 4mm dia
- Use No 6 x 1/4in SS ST Pan sq drive Screw, @ 2 per plate

Important Note: All Interlinking rails, at their ends must be attached to a Building Structure or to an Edge Post attached to the Deck structure, using Rail End Plates/Brackets

38mm Rectangular and 50mm Round Interlinking Top Rail - End Bracket Attachments

Applies to 38mm Rectangular and 50mm Round InterlinkingTop Rails only

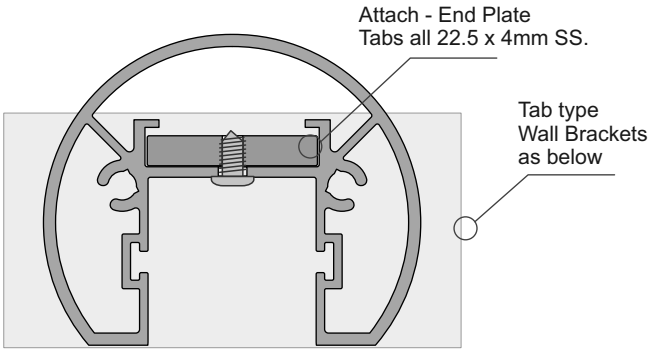

Round Interlinking Top Rail Extrusion
JET/211/5.8

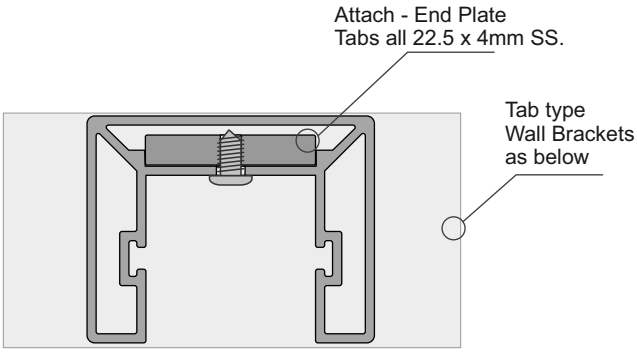

Interlinking Top Rail Extrusion
JET/220/5.8

Interlinking Top Rail End Bracket Options - Both types above - <u>Tab attach Type</u>

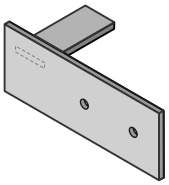

Interlinking Top Rail
Wall type End Plate
SS. 120x45mm
JET 40LH

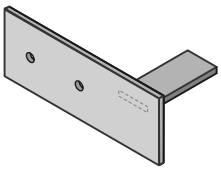

Interlinking Top Rail
Wall type End Plate
SS. 120x45mm
JET 40RH

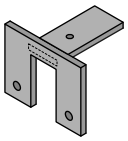

Interlinking Top Rail
End Bracket
SS. 60mm x 46mm
JET 42

Tabs all 22.5 x 4mm SS.
Front faces all 3mm SS

Interlinking Top Rail End Bracket Options - Round Type only - <u>Attach into Screw ports</u>

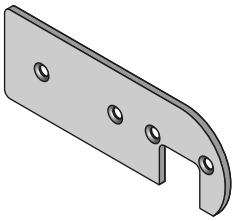

Interlinking Top Rail
Wall type offset End Plate
50mm Round Rail type only
120x42x3mm, Al
C/s both sides = RH or LH
JET 233

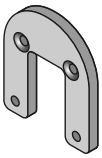

Interlinking Top Rail
Wall type End Plate
50mm Round Rail type only
50x58x5mm, Al
JET 232

General Notes:
- All fixings to be Stainless Steel - PVC Tape layer between Structure and Bracket
- ULS Point load N* = 0.9kN, inwards, outwards or down and in tension

Note : **<u>Fixing to Steel</u>**
- use 2 off 8g SS TEK Screws or M6 SS Bolts
- Steel 2mm min thickness
- Steel 300MPA minimum
- 15mm min distance to any Edges

Note : **<u>Fixing to Timber Wall</u>**
- use 2 off 8g SS Screws, 35mm min into studs.
- use Sika Supergrip 2hr
- 30mm min distance to Horizontal Edge
- If Weatherboard use suitable predrilled Wedge
- Timber stud wall to be designed and detailed in accordance with NZ3603 or NZ3604

Note : **<u>Fixing to Juralco EDGE Post</u>**
- use 2 off 8g x 25 SS PK Screws

Note : **<u>Fixing to Concrete Wall</u>**
- use 2 off M6 x70 SS Screw Anchors
- Solid Concrete min 20Mpa
- Block wall Concrete filled/Reinforced
- 140mm min Wall thickness
- 70mm min distance to Horizontal Edge
- 100mm min distance to Vertical Edge
- Blockwork wall must be corefilled /reinforced and is to be designed and detailed in accordance with NZ4230 or NZ4229

Important Note: All Interlinking rails, at their ends must be attached to a Building Structure or to an Edge Post attached to the Deck structure, using Rail End Plates/Brackets

This page applies to 12mm Toughened Glass only

25mm SS Interlinking Top Rail

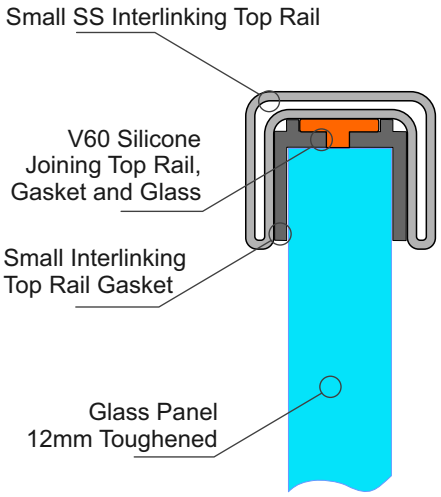

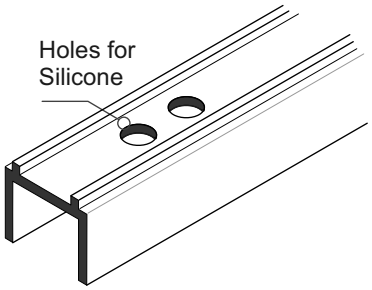

SMALL SS INTERLINKING
TOP RAIL GASKET
JET/490GT/12/2.9 (Black)

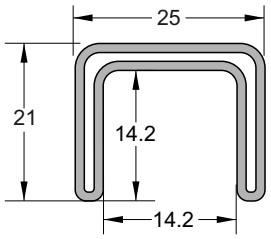

SMALL SS INTERLINKING TOP RAIL
JET/490/5.8/SSS JET/490/5.8/SCC
Duplex 2205

25mm SS Interlinking Rail Connections

Note : All these Brackets use M5 x 6 SS Grub Screws.
If necessary these holes must be Drilled + tapped M5, as shown.
The under side of the Interlinking Rail must be drilled
M6 to match M5 tapped holes positions, for access to Grub screws
- Joins, where required must be at the end of Glass Panels
Available as Satin(SSS) or Powdercoated SCC finishes

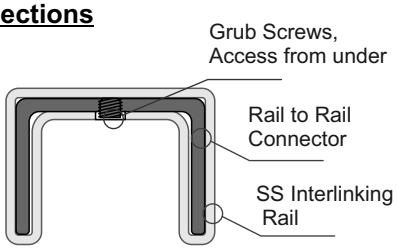

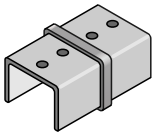

180deg INLINE JOINER
Duplex 2205
JET491/SSS JET491/SCC
21mm x 25mm x 51mm deep

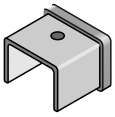

END CAP Duplex 2205
JET492/SSS JET492/SCC
21mm x 25mm x 25mm deep

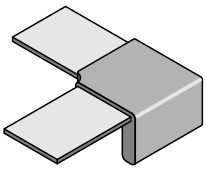

90deg JOINER Duplex 2205
JET493/SSS JET493/SCC
21mm x 80mm x 80mm

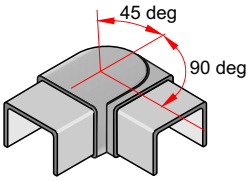

+90 to - 45 deg ADJUSTABLE HORIZONTAL
JOINER Duplex 2205
JET494/SSS JET494/SCC
21mm x25mm x 75mm overall deep

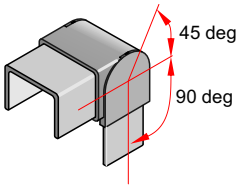

+90 to - 45 deg ADJUSTABLE
VERTICAL JOINER Duplex 2205
JET495/SSS JET495/SCC
21mm x25mm x 73mm overall deep

25mm SS Interlinking Top Rail - End Brackets

This page applies to 12mm Toughened Glass only

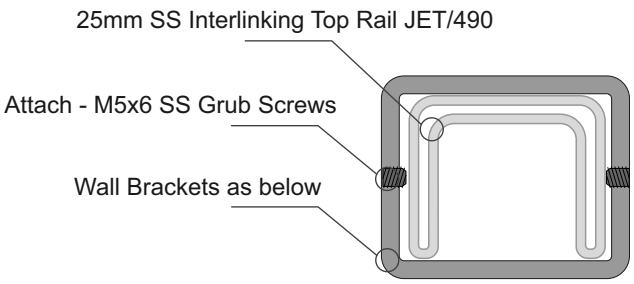

Brackets for Fixing to Wall or End Post for 25mm SS Interlinking Rail

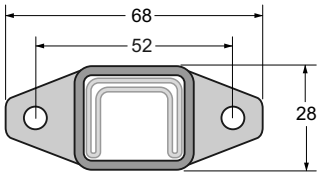

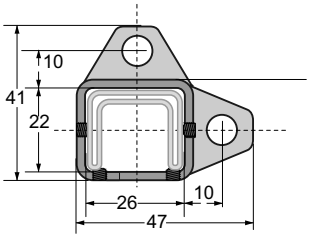

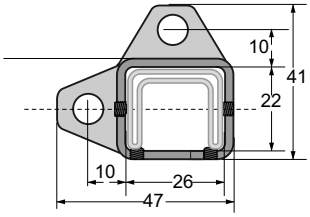

Note : All these Brackets use M5x6mm SS Grub Screws

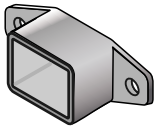

WALL BRACKET Duplex 2205
JET496/SSS JET/496/SCC
68mm x 28mm x 30mm deep

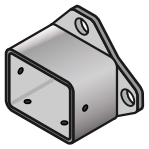

WALL BRACKET - RH. Duplec 2205
JET497/RH/SSS JET497/RH/SCC
41mm x 47mm x 30mm deep

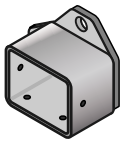

WALL BRACKET - LH Duplex 2205
JET497/LH/SSS JET497/RH/SCC
41mm x 47mm x 30mm deep

General Notes:

- All fixings to be Stainless Steel. - PVC Tape layer between Structure and Bracket
- ULS Point load N* = 0.9kN, inwards, outwards or down and in tension

Note : **Fixing to Steel**
- use 2 off 8g SS TEK Screws or M6 SS Bolts
- Steel 2mm min thickness
- Steel 300MPA minimum
- 15mm min distance to any Edges

Note : **Fixing to Timber Wall**
- use 2 off 8g SS Screws, 35mm min into studs.
- use Sika Supergrip 2hr
- 30mm min distance to Horizontal Edge
- If Weatherboard use suitable predrilled Wedge
- Timber stud wall to be designed and detailed in accordance with NZ3603 or NZ3604

Note : **Fixing to Juralco EDGE Post**
- use 2 off 8g x 25 SS PK Screws

Note : **Fixing to Concrete Wall**
- use 2 off M6 x70 SS Screw Anchors
- Solid Concrete min 20Mpa
- Block wall Concrete filled/Reinforced
- 140mm min Wall thickness
- 70mm min distance to Horizontal Edge
- 100mm min distance to Vertical Edge
- Blockwork wall must be corefilled /reinforced and is to be designed and detailed in accordance with NZ4230 or NZ4229

Important Note: All Interlinking rails, at their ends must be attached to a Building Structure or to an Edge Post attached to the Deck structure, using Rail End Plates/Brackets

40mm SS Interlinking Top Rail

This page applies to 12mm and 15mm Toughened Glass and 15.2mm and 17.2mm Laminated Glass only

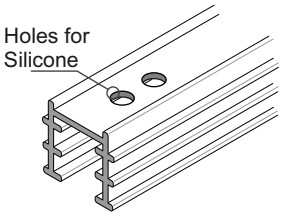

SS Interlinking Top Rail
12mm Glass Gasket
JET/430GT/12/2.9

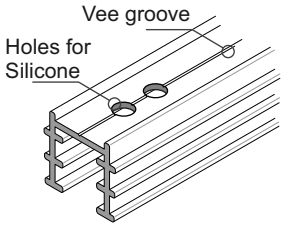

SS Interlinking Top Rail
15mm Glass Gasket
JET/430GT/15/2.9

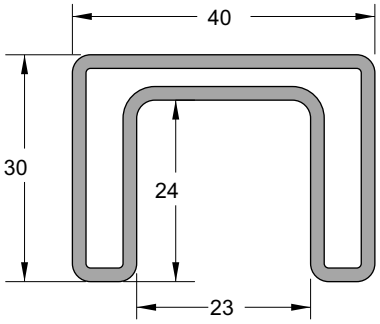

SS INTERLINKING TOP RAIL
JET/430/PSS/5.8

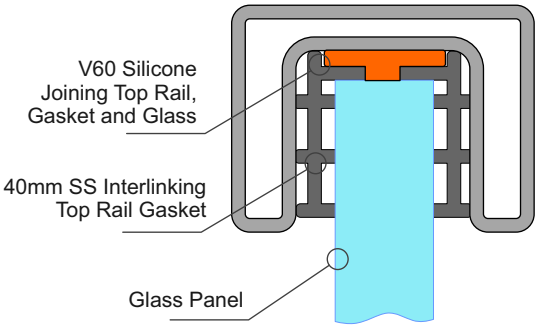

Use Gasket for 12mm and 15mm Toughened Glass

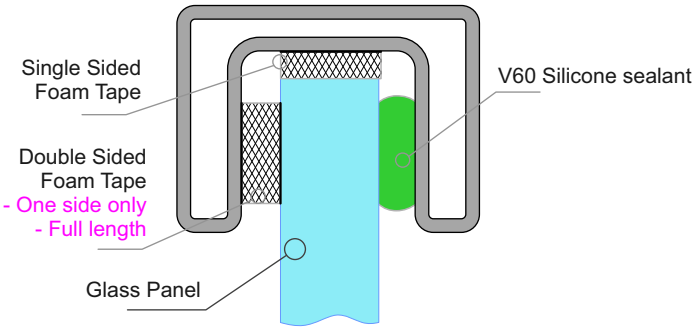

Use Foam Tape for 15.2mm and 17.2mm Laminated Glass

40mm SS Interlinking Rail Connectiors

Note : All these Brackets use M5 x 6 SS Grub Screws.
If necessary these holes must be Drilled + tapped M5, as shown.
The under side of the Interlinking Rail must be drilled
M6/7 to match M5 tapped holes positions, for access to Grub screws
- Joins, where required must be at the end of Glass Panels

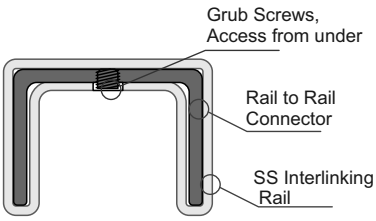

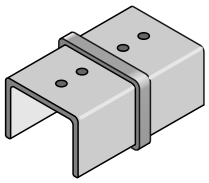

180deg INLINE JOINER 2205
JET/431/PSS
60mm x 40mm x 30mm deep

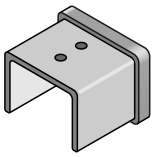

END CAP 2205
JET/432/PSS
33mm x 40mm x 30mm deep

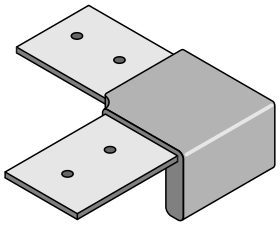

90deg JOINER 2205
JET/433/PSS
95mm x 95mm x 30mm deep

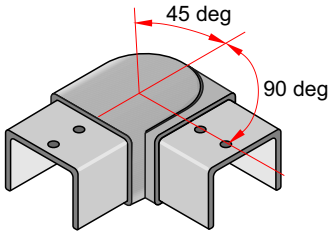

+90 to - 45 deg ADJUSTABLE
HORIZONTAL JOINER 2205
JET/434/PSS
70mm x 70mm x 30mm deep

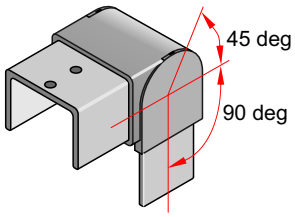

+90 to - 45 deg ADJUSTABLE
VERTICAL JOINER 2205
JET/435/PSS
60mm x 60mm x 40mm wide

40mm SS Interlinking Top Rail - End Brackets

This page applies to 12mm and 15mm Toughened Glass and 15.2mm and 17.2mm Laminated Glass only

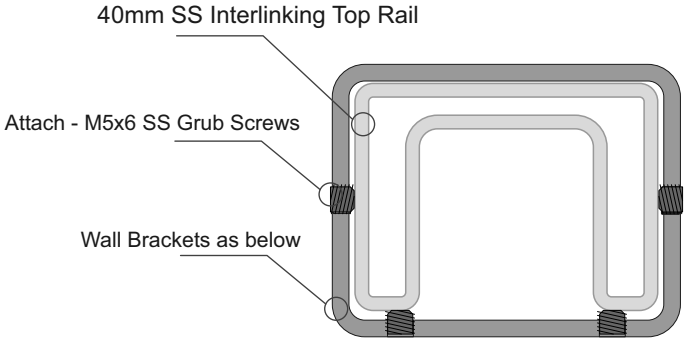

SS INTERLINKING TOP RAIL
Part No JET/430/PSS/5.8

Brackets for Fixing to Wall or End Post for 40mm SS Interlinking Rail

Note : All these Brackets use M5 x 8mm SS Grub Screws

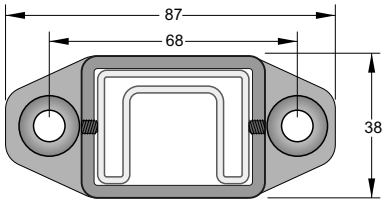

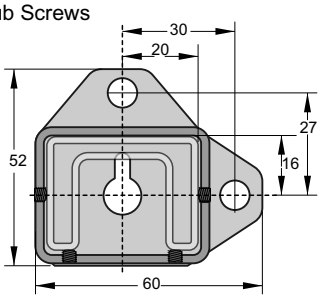

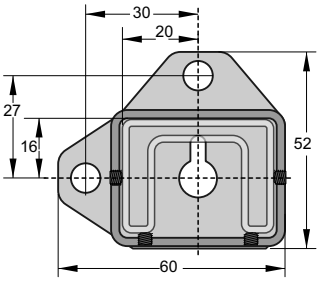

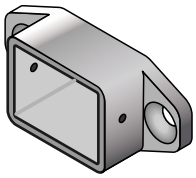

WALL BRACKET 2 FIX 2205
Part No JET/436/PSS
87mm x 37mm x 25mm deep

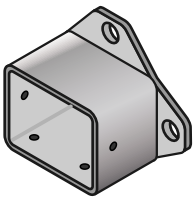

WALL BRACKET 2 FIX - RH 2205
Part No JET/437/RH/PSS
52mm x 60mm x 33mm deep

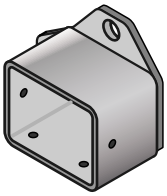

WALL BRACKET 2 FIX - LH 2205
Part No JET/437/LH/PSS
52mm x 60mm x 33mm deep

General Notes:
- All fixings to be Stainless Steel - PVC Tape layer between Structure and Bracket
- ULS Point load N* = 0.9kN, inwards, outwards or down and in tension

Note : **Fixing to Steel**
- use 2 off 8g SS TEK Screws or M6 SS Bolts
- Steel 2mm min thickness
- Steel 300MPA minimum
- 15mm min distance to any Edges

Note : **Fixing to Timber Wall**
- use 2 off 8g SS Screws, 35mm min into studs.
- use Sika Supergrip 2hr
- 30mm min distance to Horizontal Edge
- If Weatherboard use suitable predrilled Wedge
- Timber stud wall to be designed and detailed in accordance with NZ3603 or NZ3604

Note : **Fixing to Juralco EDGE Post**
- use 2 off 8g x 25 SS PK Screws

Note : **Fixing to Concrete Wall**
- use 2 off M6 x70 SS Screw Anchors
- Solid Concrete min 20Mpa
- Block wall Concrete filled/Reinforced
- 140mm min Wall thickness
- 70mm min distance to Horizontal Edge
- 100mm min distance to Vertical Edge
- Blockwork wall must be corefilled /reinforced and is to be designed and detailed in accordance with NZ4230 or NZ4229

Important Note: All Interlinking rails, at their ends must be attached to a Building Structure or to an Edge Post attached to the Deck structure, using Rail End Plates/Brackets

Glass Panel Stiffener Brackets

Applies to 15.2mm Toughened Laminated Glass and 13.52mm SentryGlas.
Also for 12mm Toughened Glass for Pool Fences only

Top Edge, Frameless Glass Stiffeners.

- Install 200mm max from Glass Top edge
- Supplied as a kit, with screws, a variety of Gaskets and a SS clamp Plate
- Duplex 2205 SS construction.
  Polished (PSS), Satin (SSS)
  or Powder coat SCC Finishes

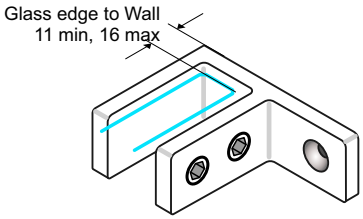

90 Deg Glass to Wall
75x505x25mm
Part No JET/72/PSS
Part No JET/72/SSS
Part No JET/72/SCC

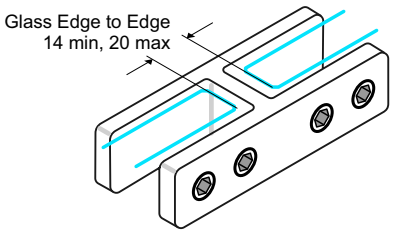

180 Deg Glass to Glass
70x34x25mm
Part No JET/71/PSS
Part No JET/71/SSS
Part No JET/71/SCC

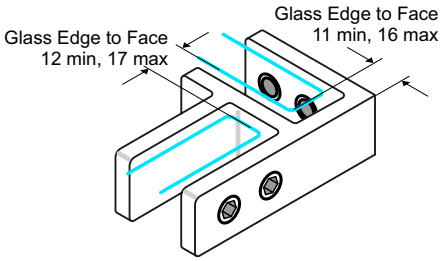

90 deg Glass to Glass
65x55x25mm
Part No JET/70/PSS
Part No JET/70/SSS
Part No JET/70/SCC

90 - 180 Deg
Adjustable Glass to Glass
135x34x25mm
Part No JET/73/PSS
Part No JET/73/SSS
Part No JET/73/SCC

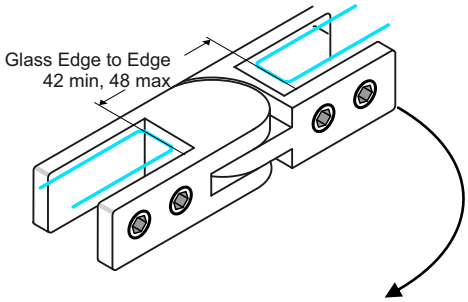

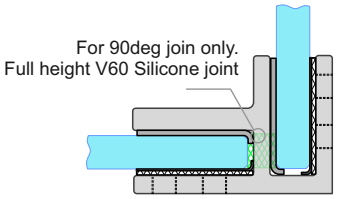

Top Edge, Frameless Glass Stiffeners.

- Install 200mm max from Glass Top edge
- Supplied as a kit, with screws, a variety of Gaskets and a SS clamp Plate
- Duplex 2205 SS construction.
  Polished (PSS), Satin (SSS)
  or Powder coat SCC Finishes

Applies to 17.2mm Toughened Laminated Glass and 17.52mm SentryGlas only.
Up to max Barrier height 1250mm

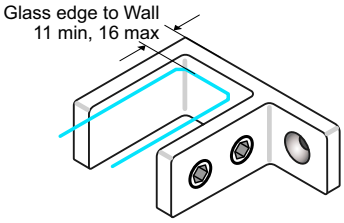

90 Deg Glass to Wall
65x55x25mm
Part No JET/82/PSS
Part No JET/82/SSS
Part No JET/82/SCC

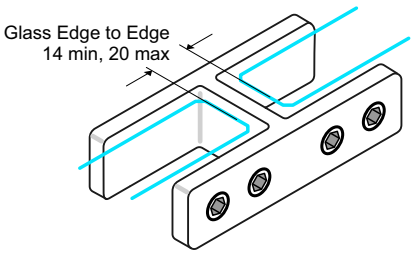

180 Deg Glass to Glass
103x39x25mm
Part No JET/81/PSS
Part No JET/81/SSS
Part No JET/81/SCC

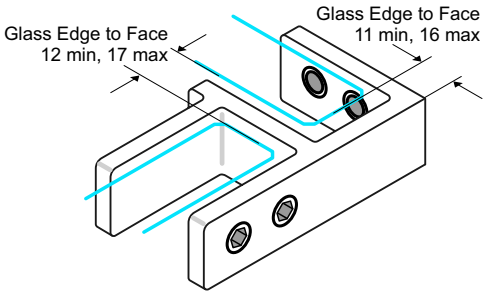

90 deg Glass to Glass
88x55x25mm
Part No JET/80/PSS
Part No JET/80/SSS
Part No JET/80/SCC

90 - 180 Deg Adjustable
Glass to Glass
145x39x25mm
Part No JET/83/PSS
Part No JET/83/SSS
Part No JET/83/SCC

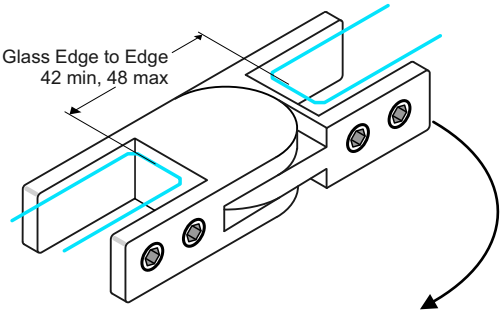

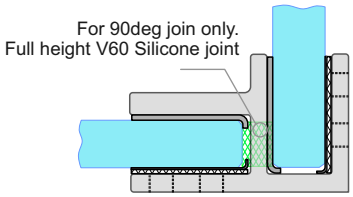

Interlinking Top Rail attaching to Timber Wall

Applies to 38mm Rectangular and 50mm Round InterlinkingTop Rails only

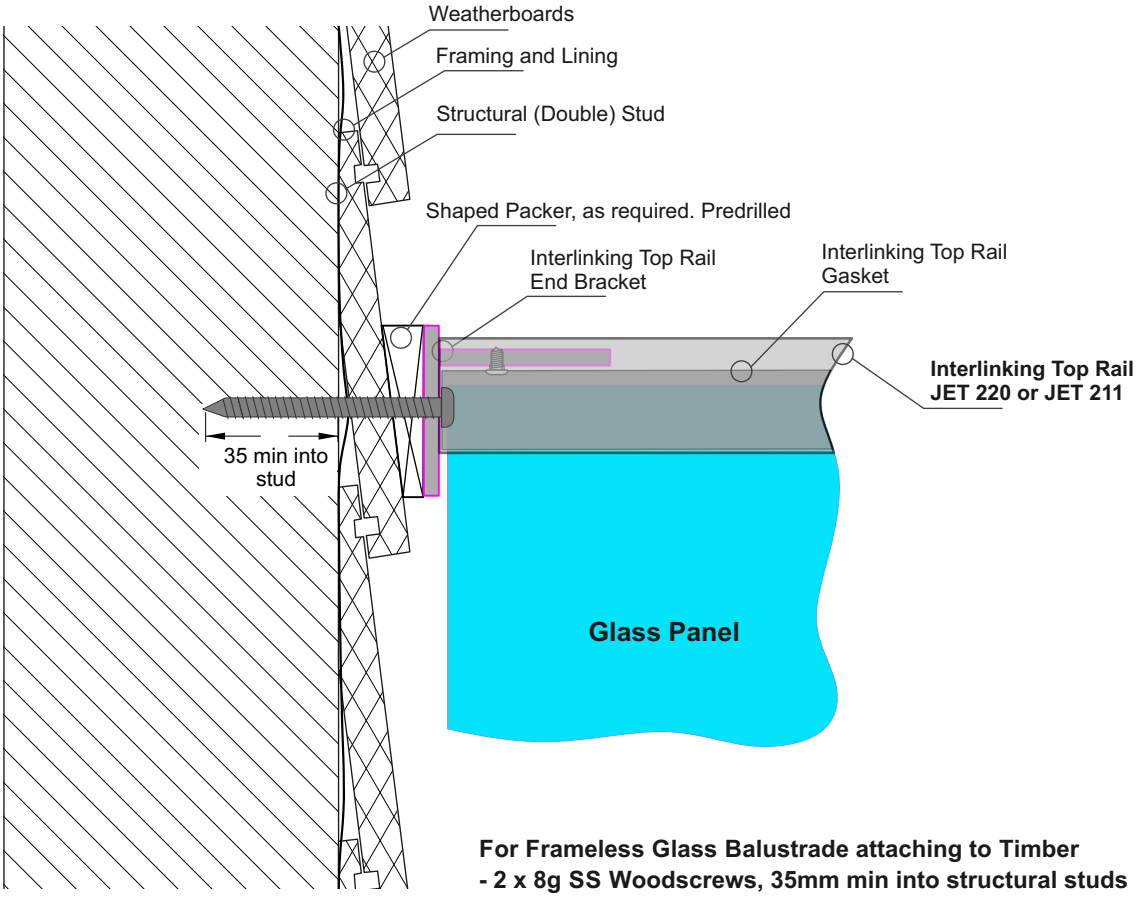

For Frameless Glass Balustrade attaching to Timber
- 2 x 8g SS Woodscrews, 35mm min into structural studs
- 20mm min to edge of stud in all directions

Interlinking Top Rail End Bracket Options - Drawing above shows JET40

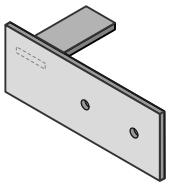

Interlinking Top Rail
Wall type End Plate
SS. 120x45mm
Part No JET 40LH

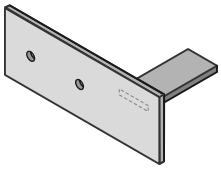

Interlinking Top Rail
Wall type End Plate
SS. 120x45mm
Part No JET 40RH

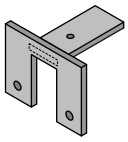

Interlinking Top Rail
End Bracket
SS. 60mm x 46mm
Part No JET 42

Notes:
- All fixings to be stainless steel
- Timber stud wall to be designed by Project structural engineer for loads imposed by Balustrade.
- ULS Point load N* = 0.9kN, inwards, outwards or down.
- Minimum Stud size = 90mm x 45mm
- Minimum Timber grade = Sg8
- Timber stud wall to be designed and detailed in accordance with NZ3603 or NZ3604

Interlinking Top Rail attaching to Concrete Wall

Applies to 38mm Rectangular and 50mm Round InterlinkingTop Rails only

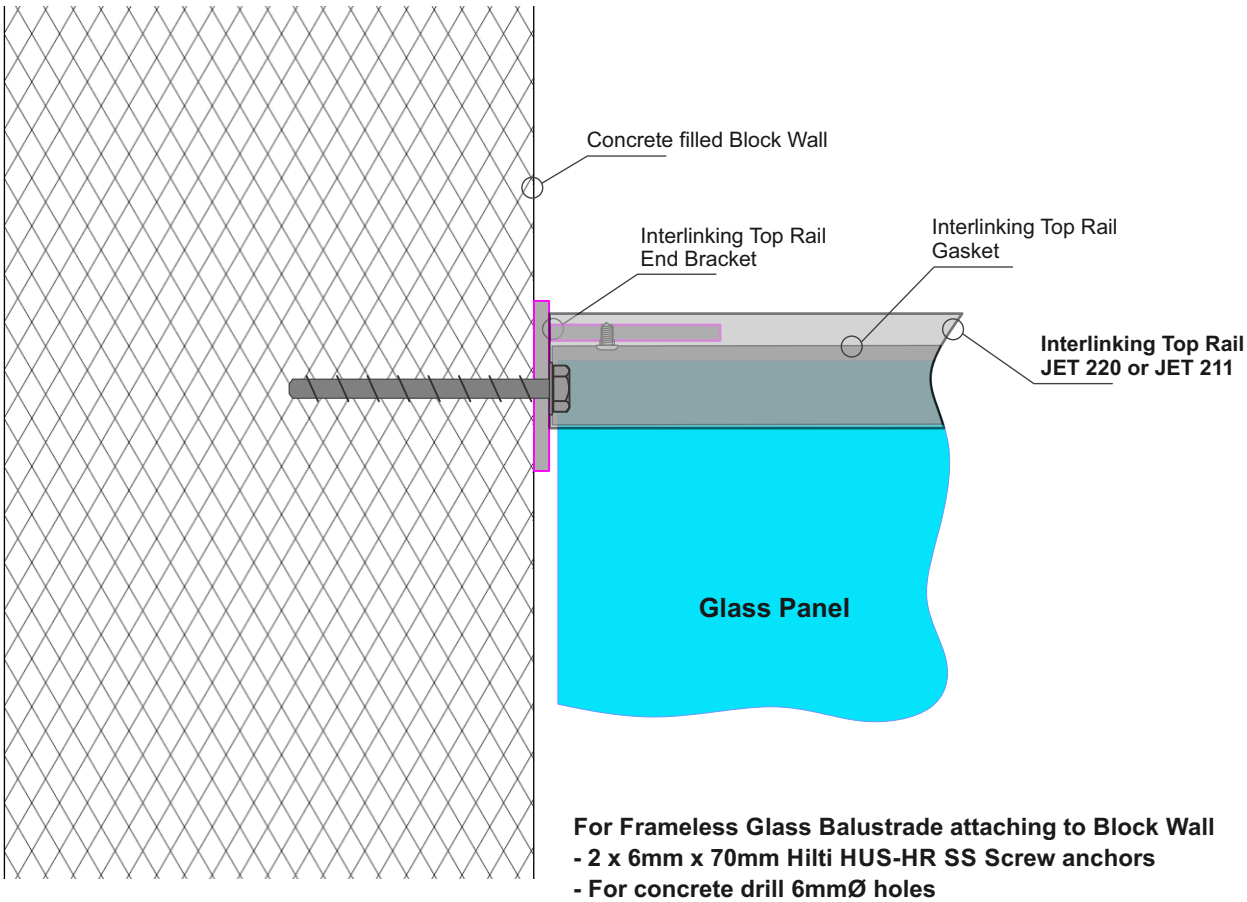

For Frameless Glass Balustrade attaching to Block Wall
- 2 x 6mm x 70mm Hilti HUS-HR SS Screw anchors
- For concrete drill 6mmØ holes
- 70mm min to side edge of concrete, 100mm to top edge.

Interlinking Top Rail End Bracket Options - Drawing above shows JET40

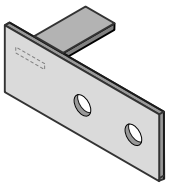

Interlinking Top Rail
Wall type End Plate
SS. 120x45mm
Part No JET 40LH

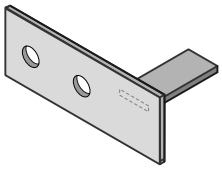

Interlinking Top Rail
Wall type End Plate
SS. 120x45mm
Part No JET 40RH

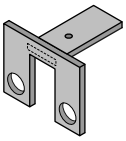

Interlinking Top Rail
End Bracket
SS. 60mm x 46mm
Part No JET 42

<u>Drill out holes to 9mmØ</u>

Notes:
- All fixings to be stainless steel
- Blockwall to be designed by Project structural engineer for loads imposed by Balustrade.
- ULS Point load N* = 0.9kN, inwards, outwards or down.
- Minimum blockwork thickness = 140mm
- Minimum core fill concrete strength = 17.5MPa
- Blockwork wall must be corefilled /reinforced and is to be designed and detailed in accordance with NZ4230 or NZ4229

Juralco Edgetec Infinity® Balustrade System
Interlinking Top Rail for attaching to an Edge balustrade End Post where Wall fixing not suitable

Applies to InterlinkingTop Rails suitable for 12mm or 15mm Toughened and 15.2mm or 17.2mm Laminated Glass

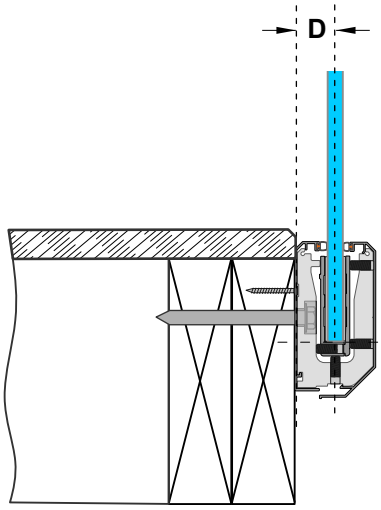

Face Fix Infinity

Make 'D' dimension the same for both, then all in line

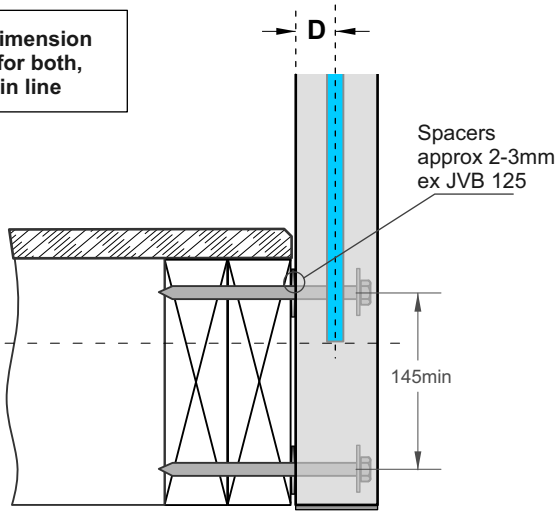

Face Fix Edge Post JEB/208 as an End Post using a Top Rail + End Brackets

---

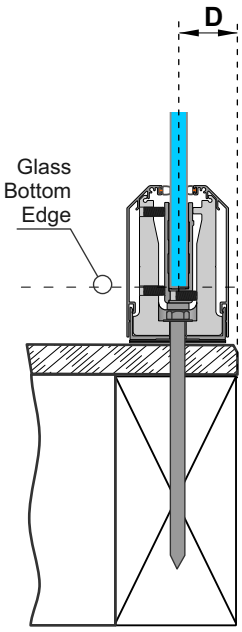

Top Fix Infinity

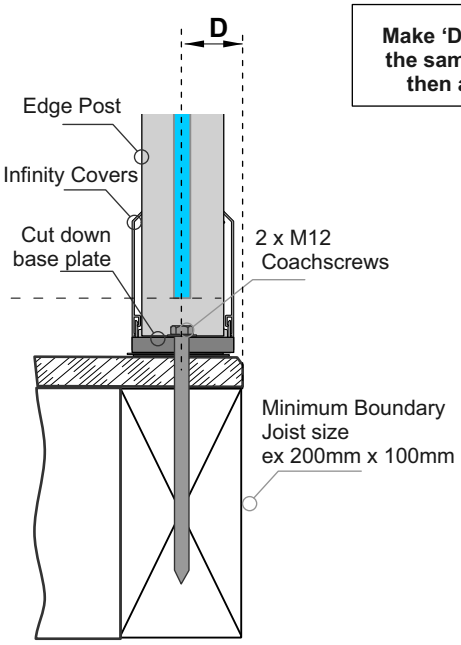

Top Fix Edge Post JEB/207 as an End Post using a Top Rail + End Brackets

Make 'D' dimension the same for both, then all in line

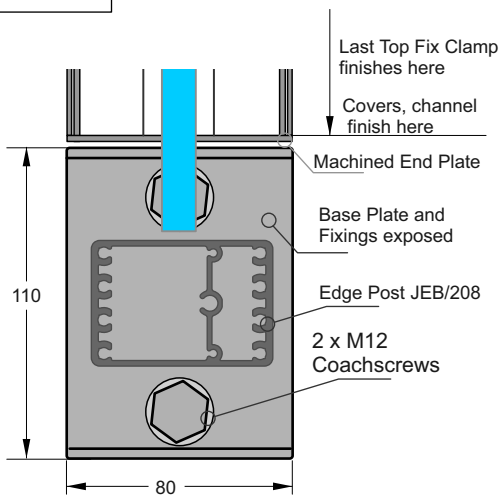

Base Plate cut down to 80mm wide to match Covers OD

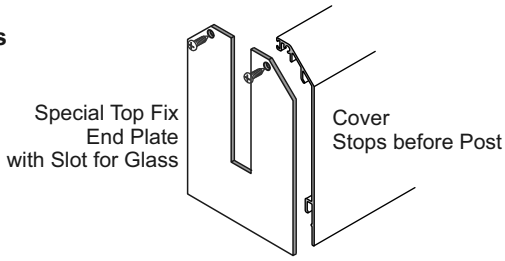

Juralco Interlinking Rails

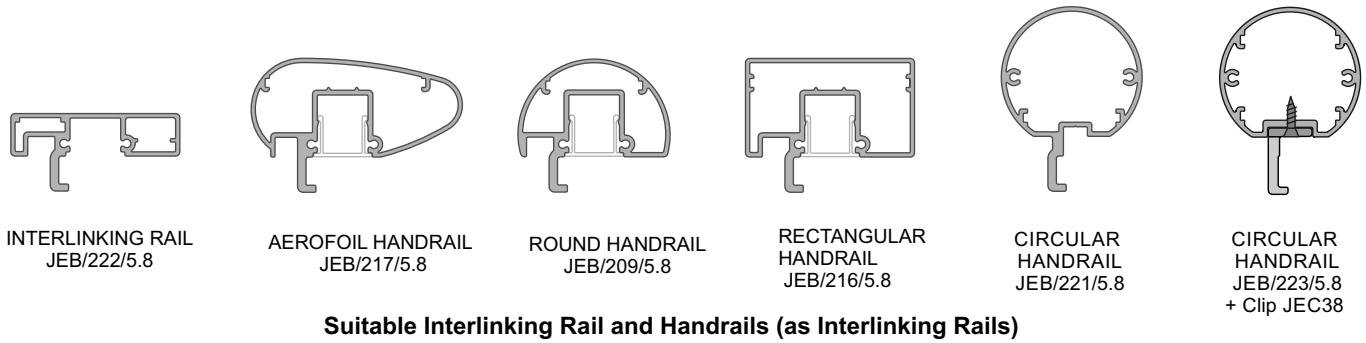

Suitable Interlinking Rail and Handrails (as Interlinking Rails)

Interlinking or Handrails on Deck side.

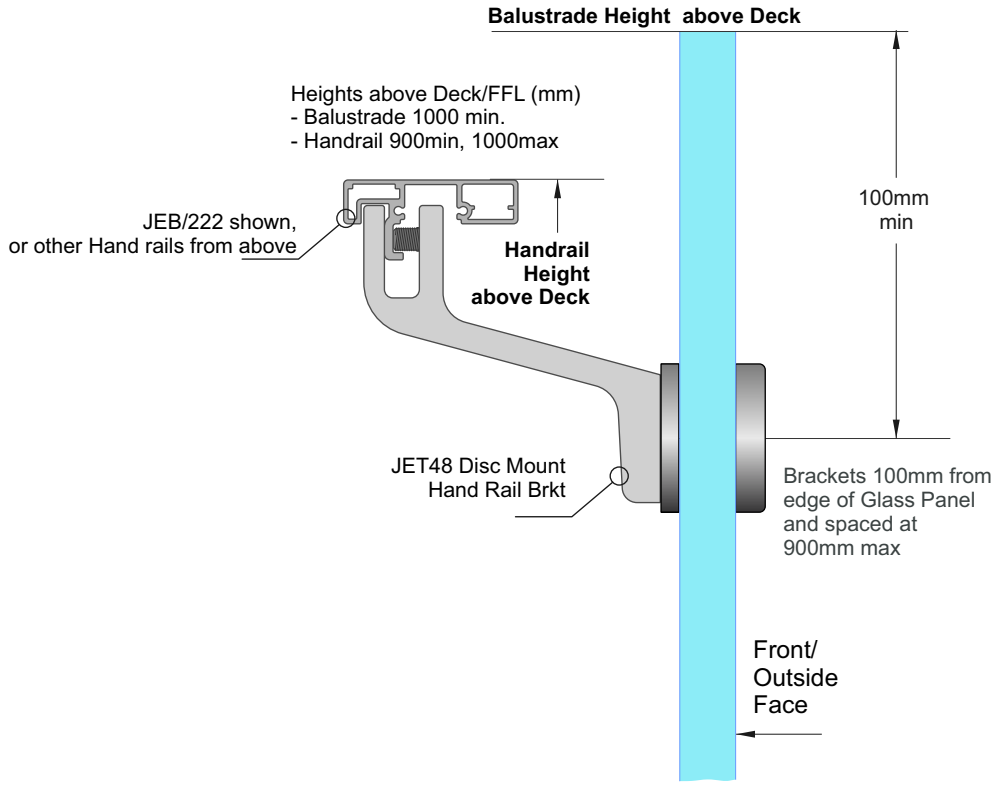

Important Note: All Interlinking rails, at their ends must be attached to a Building Structure or to an Edge Post attached to the Deck structure, using Rail End Plates/Brackets. Applies to Handrails used as Interlinking Rails

Handrail End Plates for Attaching to a Structure or Edge Deck mounted Post

End Caps for Handrails, Wall or Edge Post attach for JEB 222, 217, 209, 216 and 221 Handrails

End Caps
all ex 3mm Aluminium

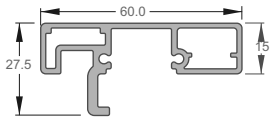

HANDRAIL
Part No JEB/222/5.8

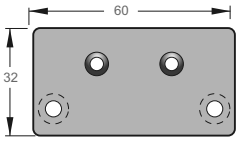

HANDRAIL
WALL ATTACH END PLATE
Part No JEC215/WC

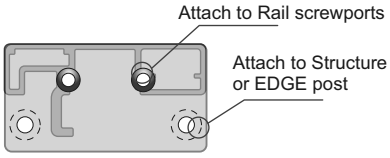

For RH and LH

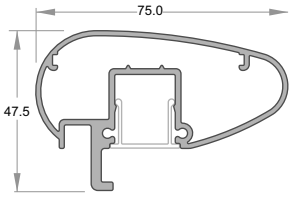

AEROFOIL HANDRAIL
Part No JEB/217/5.8

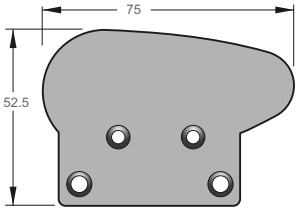

HANDRAIL
WALL ATTACH END PLATE
Part No JEC217/WC

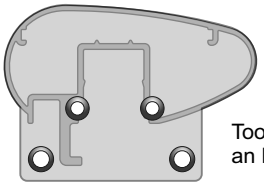

Too wide for
an EDGE Post

For RH and LH

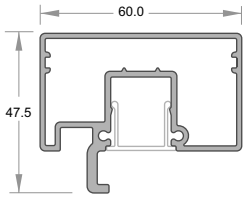

RECTANGULAR
HANDRAIL
Part No JEB/216/5.8

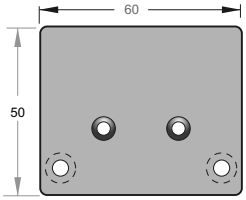

HANDRAIL
WALL ATTACH END PLATE
Part No JEC216/WC

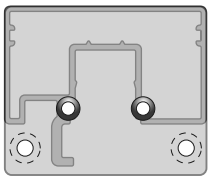

For RH and LH

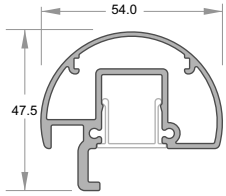

HALF ROUND HANDRAIL
Part No JEB/209/5.8

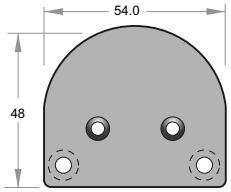

HANDRAIL
WALL ATTACH END PLATE
Part No JEC209/WC

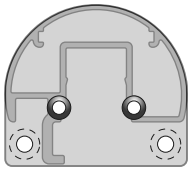

For RH and LH

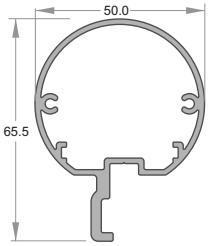

CIRCULAR HANDRAIL
Part No JEB/221/5.8

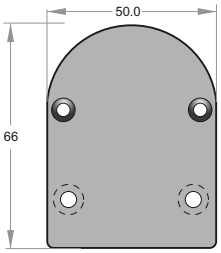

HANDRAIL
WALL ATTACH END PLATE
Part No JEC221/WC

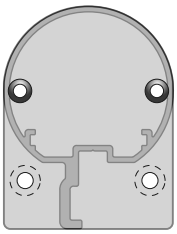

For RH and LH

General Notes: - All fixings to be Stainless Steel. - EPDM layer between Structure and End Cap
- ULS Point load N* = 0.9kN, inwards, outwards or down and in tension

Note : **Fixing to Steel**
- use 2 off 8g SS TEK Screws or M6 SS Bolts
- Steel 2mm min thickness
- Steel 300MPA minimum
- 15mm min distance to any Edges

Note : **Fixing to Timber Wall**
- use 2 off 8g SS Screws, 35mm min into studs.
- use Sika Supergrip 2hr
- 30mm min distance to Horizontal Edge
- If Weatherboard use suitable predrilled Wedge
- Timber stud wall to be designed and detailed in accordance with NZ3603 or NZ3604

Note : **Fixing to Juralco EDGE Post**
- use 2 off 8g x 25 SS PK Screws

Note : **Fixing to Concrete Wall**
- use 2 off M6 x70 SS Screw Anchors
- Solid Concrete min 20Mpa
- Block wall Concrete filled/Reinforced
- 140mm min Wall thickness
- 70mm min distance to Horizontal Edge
- 100mm min distance to Vertical Edge
- Blockwork wall must be corefilled /reinforced and is to be designed and detailed in accordance with NZ4230 or NZ4229

Handrail Joiners

Rectangular Handrails and 75mm Aerofoil - End Cap, Straight and 90deg corners

All ex 3mm Aluminium

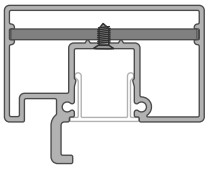

RECTANGULAR HANDRAIL JEB/216/5.8

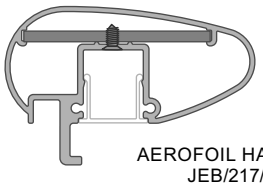

AEROFOIL HANDRAIL JEB/217/5.8

Use No6 x 1/4in SS pan sq drive screws, 2 ea side of joint

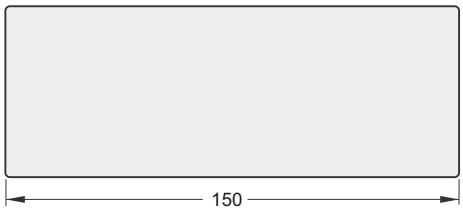

Rectangular and 75m Aerofoil Inline Joiner
Use 56.5 x 3 flat bar JA/189/5.0

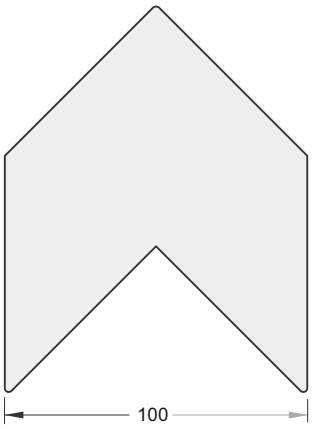

Rectangular and 75m Aerofoil 90deg Corner Joiner JEC 01

Round and Circular Handrail, End Cap, Straight and 90deg corners

All ex 3mm Aluminium

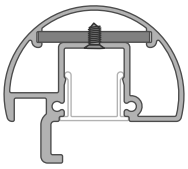

ROUND HANDRAIL JEB/209/5.8

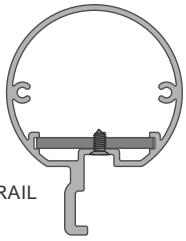

CIRCULAR HANDRAIL JEB/221/5.8

Use No6 x 1/4in SS pan sq drive screws, 2 ea side of joint

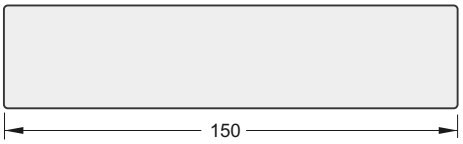

Round and Circular Inline Joiner
Use 34.0 x 3 flat bar JA/188/5.0

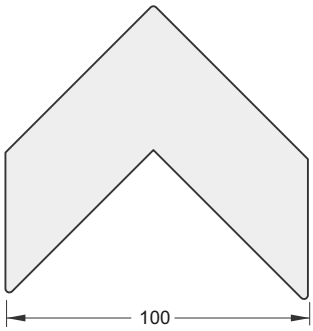

Round and Circular 90deg Corner Joiner JEC 04

Interlinking Rail End Cap, Straight 135 deg and 90deg corners

All ex 3mm Aluminium

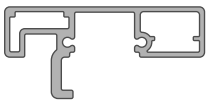

STANDARD HANDRAIL JEB/222/5.8

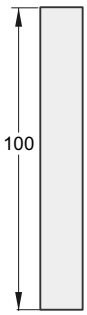

14mm Straight Joiner JEC32

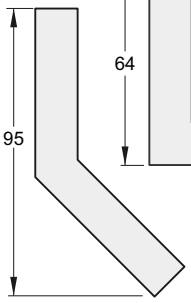

14mm, 135deg Corner Joiner JEC36

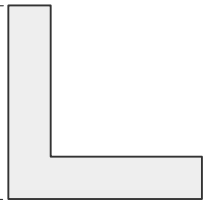

14mm, 90deg Corner Joiner JEC34

17.5 bar

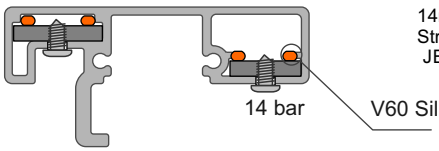

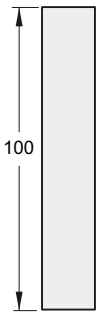

17.5mm Straight Joiner JEC33

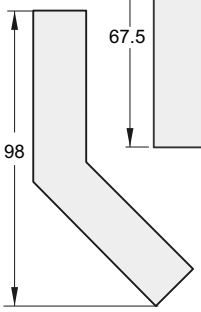

17.5mm, 135deg Corner Joiner JEC37

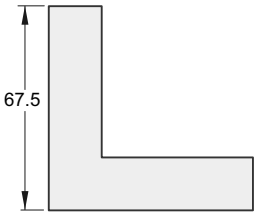

17.5mm, 90deg Corner Joiner JEC35

Joiners:
- With Joiner in place, spot drill from below for position
- Drill out joiner to 3mm dia, extrusion to 4mm dia
- Use No 6 x 1/4in SS ST Pan sq drive screw
- Insert dobs of V60 Silicone inside cavities before inserting
- Both ends to be attached.
- Joins must be within 300mm of Post
- Minimum distance between screw and end of handrail is 10mm

Powder Coating Care and Maintenance

Powder Coating Installation Care

Warning re use of solvents:
- In some cases strong solvents are recommended for thinning various types of paints and also for cleaning up mastics and sealants.
- These can be harmful to the extended life of the powder coated surface, and must not be used for cleaning purposes.
- It is important to note that the damage will not be visible immediately and may take up to l2 months to develop.

If paint splashes or sealants and mastics need to be removed then the following may be safely used:
Methylated Spirits, Ethyl Alcohol, Isopropanol or preferably a mild detergent in warm water.

Joinery Protection during Installation:
All the activity on a construction site means that your powder coated items may get knocked or scratched, splattered with mortar, plaster, textured coating or paint during the later stages of construction.

Please ensure that all powder coated articles are masked or covered at this time.
It is far easier to prevent accidents than to try and correct them.
Should your joinery receive mortar or paint splashes see that these are removed before cure and follow the instructions contained in this brochure.

Typical sticker used to warn other trades of the need to protect and mask off powder coated joinery (applies to anodised joinery also)

"IMPORTANT ALL TRADES"
This valuable aluminium joinery will suffer permanent damage from: plaster, mortar and paint splashes - Protect if splashes occur - Immediately wash down joinery with water or meths - Do not allow splashes to harden! ~ Do not use solvents! - Do not remove this label until final clean completed.

This photograph display damage that has occurred on site, post installation. The photo of the masked joinery displays clear signs of damage that could have occurred were it not masked. Please ensure that your joinery is protected right through the entire construction process.

Powder Coating Maintenance

External - Maintenance Program:
To extend the life of external powder coated articles and to comply with warranty requirements for powder coated aluminium joinery, a simple, regular maintenance program must be implemented.
The effects of ultra violet light, atmospheric pollution, dirt, grime and airborne salt deposits will all accumulate over time and must be removed or surface staining and weathering will occur, leading to an unsightly appearance.

For external coatings, cleaning should take place every six months. In areas where pollutants are more prevalent, such as beachfront houses and industrial or geothermal areas, then a cleaning program should be carried out on a more frequent basis ie. every one to three months.

Fences or Balustrades in close proximity to swimming pools must be washed down every six months, to clean off chlorine and salt deposits.

Cleaning your powder coating:
1. Carefully remove any loose surface deposits with a wet sponge.
2. Use a soft brush (non abrasive) and a mild household detergent (do not use solvents) in warm water, remove dust, salt and other deposits.
3. Rinse off with clean fresh water.

Restoring weathered or scratched surfaces:
Repair of Scuffed or Scratched surfaces
Dulux Spray Cans are available in all colour card colours.

Repair of Small Scratches or Chips.
Dulux Dabsticks are ideally suited for the repair of small scratches.
Dabsticks may not be available in all colour card colours.

Repair of Weathered areas .
Dulux Gloss Up is a light to medium cutting cream ideally suited for gloss restoration and has been specifically designed for this purpose.
Gloss Up contains no waxes or silicone and is a one step system.

Contact Dulux Powder Coatings , ph 0064 9 441 8244

Glass Care and Maintenance

Glass Cleaning and Maintenance

Architectural glass products must be properly cleaned during the construction period so visual and aesthetic clarity are maintained. Because glass can be permanently damaged if improperly cleaned, glass producers and fabricators recommend strict compliance with the following procedures.

First, determine whether the glass is clear, tinted or reflective. Surface damage is more noticeable on reflective glass compared with the other glass products. If the reflective coated surface is exposed, either on the exterior or interior, special care must be taken when cleaning, as scratches can result in coating removal and a visible change in light transmittance. Cleaning tinted and reflective glass in direct sunlight should be avoided. Cleaning should begin at the top of the building and continue to the lower levels.

Commence cleaning by soaking the glass surfaces with clean water and a soap solution to loosen dirt or debris. Then, using a mild, non-abrasive commercial window washing solution, uniformly apply the solution to the glass surfaces with a non-abrasive applicator and follow with a squeegee to remove all of the cleaning solution from the glass surface.

Ensure that no metal parts of the cleaning equipment touch the glass surface and that no abrasive particles are trapped between the glass and the cleaning materials. All water and cleaning solution residue should be dried from the window gaskets, sealants and frames.

Scratches and Metal Scrapers

Scratches can occur from hard pointed objects or poor handling, but most often occurs from the careless removal of foreign matter from the glass surface.

Mortar splatter and paint are common offenders and efforts to remove after hardening almost always lead to surface damage. It is essential that the foreign materials are removed before they harden. Better still, if construction work continues after glazing, that the glazed areas are protected by adhesive plastic films or suitable tarpaulins or covers.

One of the common mistakes made by non-glass trades people, including glass cleaning contractors, is the use of razor blades or other metal scrapers on a large portion of the glass surface. Using large blades to scrape a window clean carries considerable risk of causing damage to the glass.

The glass industry, fabricators, distributors and installers neither condones nor recommends any scraping of glass surfaces with metal blades or knives. Such scraping usually permanently damages or scratches the glass surfaces. When paint or other construction materials cannot be removed with normal cleaning procedures, a new 25mm razor blade may have to be used. The razor blade should be used on small spots only. Cleaning should be done in one direction only. Never scrape in a back and forth motion as this could trap particles under the blade that could scratch the glass.

Blades or scrapers can dislodge “pickup” on toughened glass. There are fine particles of glass that are fused on to the surface during toughening. Once dislodged they can scratch the glass.

Glass Cleaning, Do’s and Don’ts

DO NOT..

- Do Not - Use Scrapers of any type or size on a Glass surface
- Do Not - Leave building dirt or residues to remain on Glass for a period of time.
- Do Not - Begin cleaning glass until you have identified the surface type.
- Do Not - Clean Glass surfaces in direct sunlight.
- Do Not - Allow dirty water or cleaning residues to remain on the Glass.
- Do Not - Begin cleaning before rinsing off a loose residues.
- Do Not - Use abrasive cleaning solutions, materials or solvents.
- Do Not - Allow metal parts of the cleaning equipment to come in contact with the Glass.
- Do Not - Trap abrasive particles between the cleaning material and the Glass.

DO...

- Clean glass promptly when dirt or building residues appear.
- Determine glass surface type.
- Exercise special care when cleaning coated surfaces.
- Avoid cleaning glass surfaces in direct sunlight.
- Start cleaning at the top of a building, then continue to lower levels.
- Soak the glass surface in a clean soapy solution before cleaning.
- Use a mild non abrasive commercial cleaner.
- Use a squeege to remove all cleaning solution.
- Try your procedures on a small window and check.
- Caution other trades re the care and protection of the glass surfaces.

Residues of surface grit may be present from the toughening production process.
These grit particles must not be dragged across the surface.
NEVER use Metal Scrapers

All above reprinted with permission from Metro Glass Tech

Care and Maintenance of Stainless Steel

Introduction

Stainless steels are selected for applications where their inherent corrosion resistance, strength and aesthetic appeal are required. However, dependent on the service conditions, stainless steels will stain and discolour due to surface deposits and so cannot be assumed to be completely maintenance-free. In order to achieve maximum corrosion resistance and aesthetic appeal, the surface of the stainless steel must be kept clean. Provided the grade of stainless steel and the surface finish are correctly selected, and cleaning schedules carried out on a regular basis, good performance and long service life will result.

For the correct selection of a Stainless Steel grade, with respect to Location, see Table below.

Factors affecting maintenance

Surface contamination and the formation of deposits on the surface of the stainless steel must be prevented. These deposits may be minute particles of iron or rust generated during construction. Industrial and even naturally occurring atmospheric conditions can produce deposits which can be equally corrosive, e.g. salt deposits from marine conditions.

Working environments can also provide aggressive conditions such as heat and humidity in swimming pool buildings. These conditions can result in surface discolouration of stainless steels and so maintenance on a more frequent basis may be required.

Modern processes use many cleaners, sterilizers and bleaches for hygienic purposes. Proprietary solutions, when used in accordance with makers' instructions, should be safe but if used incorrectly (e.g. warm or concentrated), may cause discolouration or corrosion on stainless steels. Strong acid solutions are sometimes used to clean masonry and tiling of buildings. These acids should never be used where contact with metals, including stainless steel, is possible. If this happens, the acid solution must be removed immediately, followed by dilution and rinsing with clean water.

Maintenance programme

With care taken during fabrication and installation, cleaning before 'hand-over' should not present any problems. More attention may be required if the installation period has been prolonged or hand-over delayed. Where surface contamination is suspected, immediate cleaning after site fixing should avoid problems later.

The frequency of cleaning is dependent on the application. This may vary from once to four times a year for external applications, Recommendations on cleaning frequencies in architectural applications are shown below.

Cleaning frequency

Reccommended Cleaning for various grades of Stainless Steel		
Location	304 Grade	316 Grade
Surbarban or Rural	Clean at 6-12mth intervals or as necessary	
Industrial or Urban	Clean at 3-6mth intervals	Clean at 6-12mth intervals
Coastal or Marine	Not recommended	