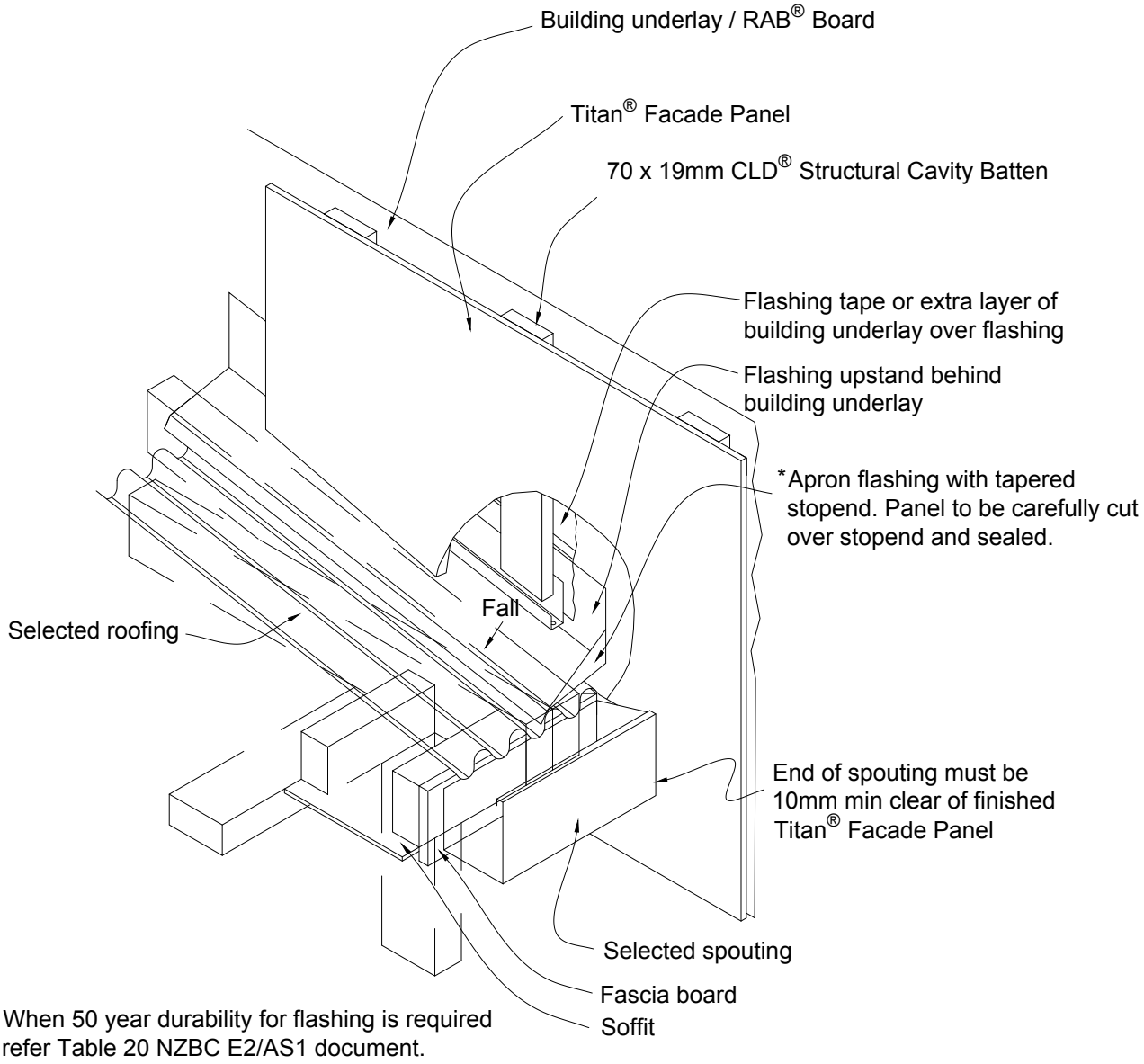

n_zrc_tfc_26za.dwg

February 2013

James Hardie®
a smarter way™

www.jameshardie.co.nz

Titan® Facade Panel and CLD® Structural Cavity Batten

Scale 1:10

ROOF TO WALL JUNCTION DETAIL

FIGURE 26