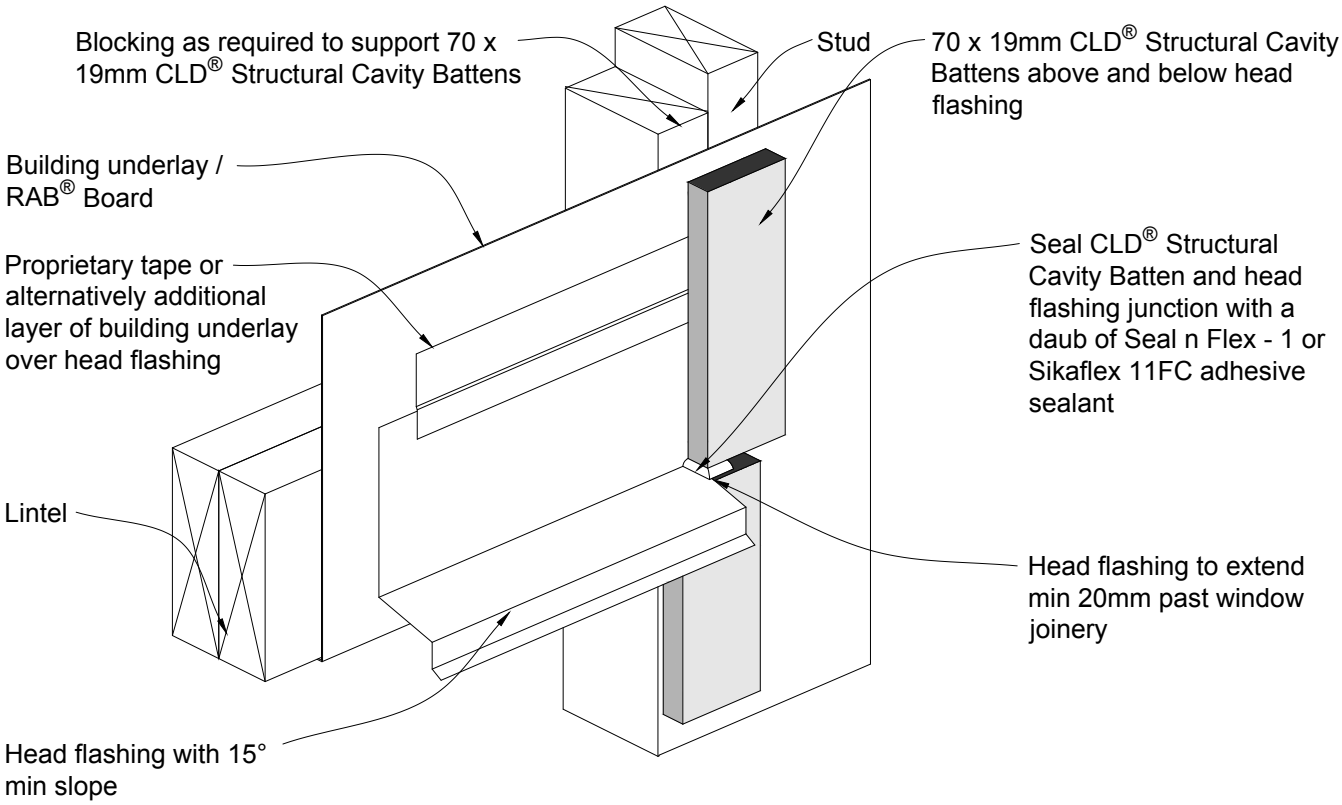

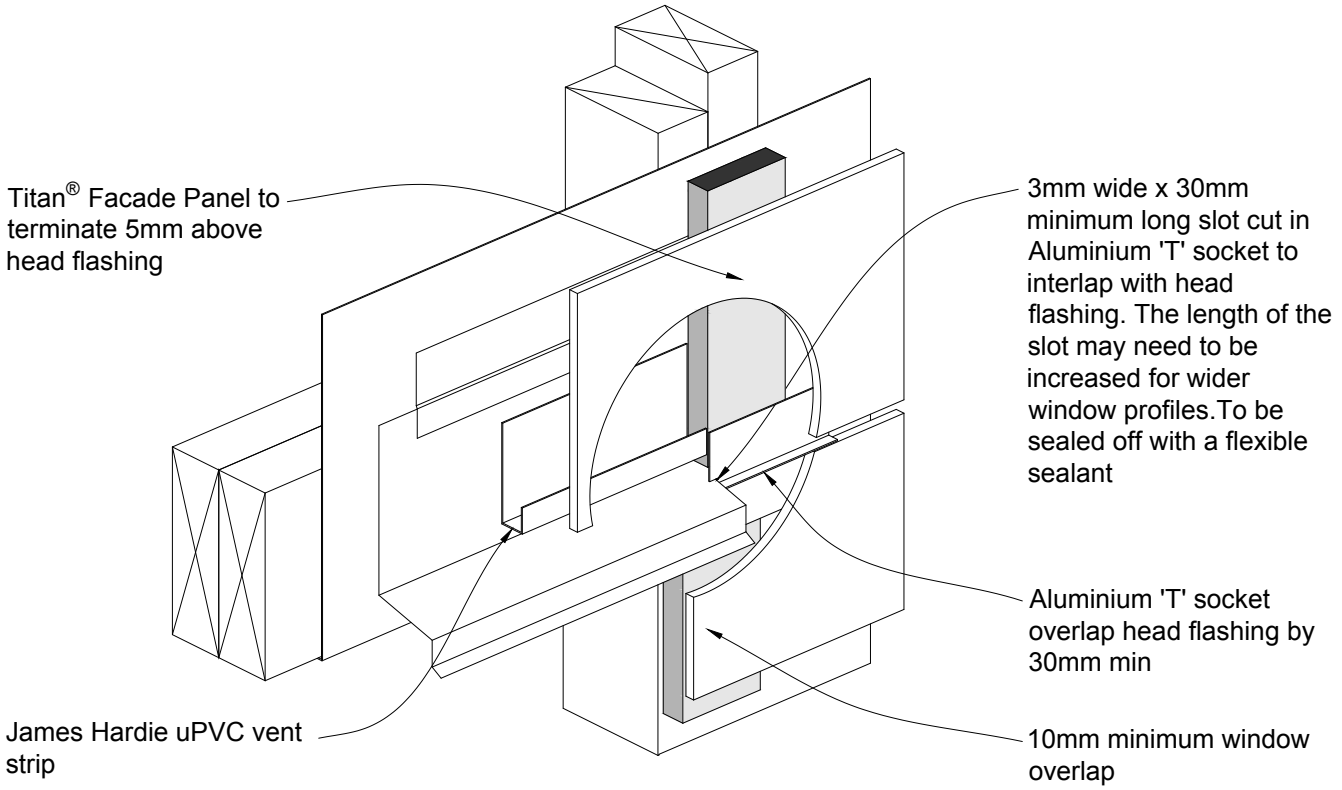

n_zrc_tfc_32za.dwg

February 2013

James Hardie®
a smarter way™

www.jameshardie.co.nz

Scale 1:5

Titan® Facade Panel and CLD® Structural Cavity Batten

'T' SOCKET JOINT AT WINDOW HEAD

FIGURE 32