BGC Fibre Cement

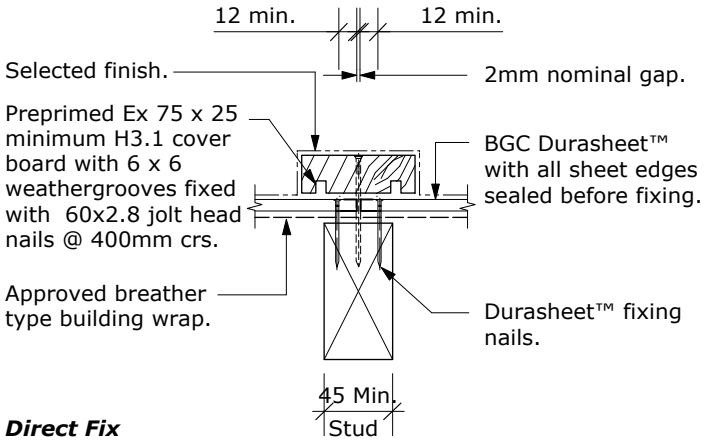

Direct Fix

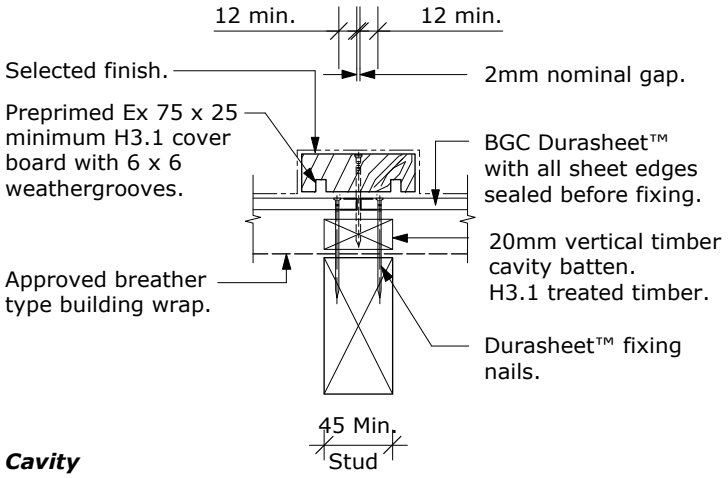

Cavity

PROFILE	BGC Durasheet™	DATE	Feb 2010
		SCALE	1:5 @ A4
DETAIL	Vertical Timber Batten Joints	DETAIL NO.	D 05