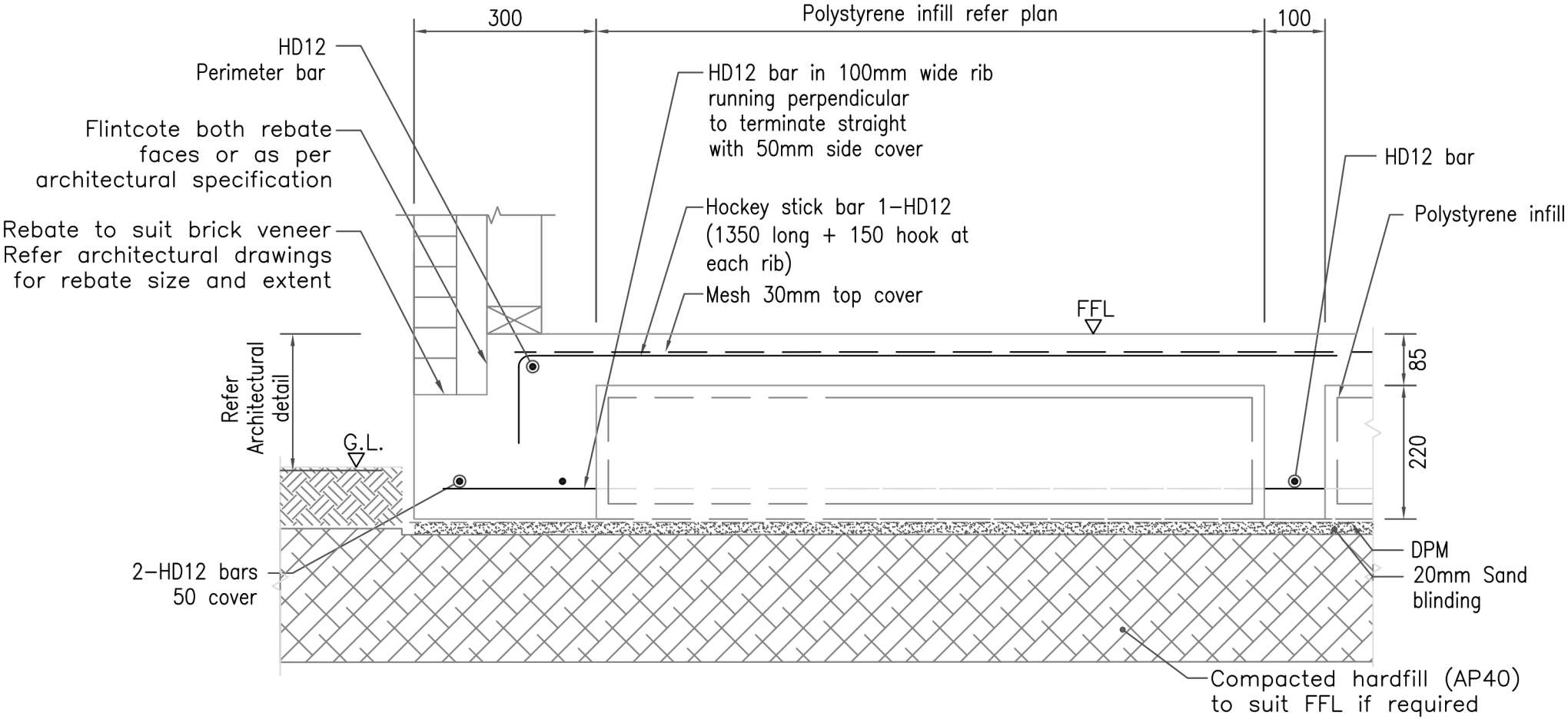

BRICK PERIMETER DETAIL