Sullivan Hall
CHARTERED ENGINEERS
PRODUCER STATEMENT
DESIGN ☑ DESIGN REVIEW ☐
REVIEWED FOR SPECIFICALLY DESIGNED STRUCTURAL CONTENT ONLY AS DESCRIBED IN CALCULATIONS ONLY
CAT. END

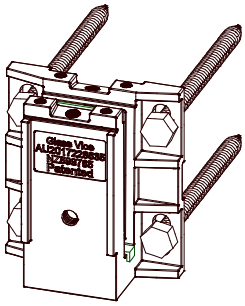

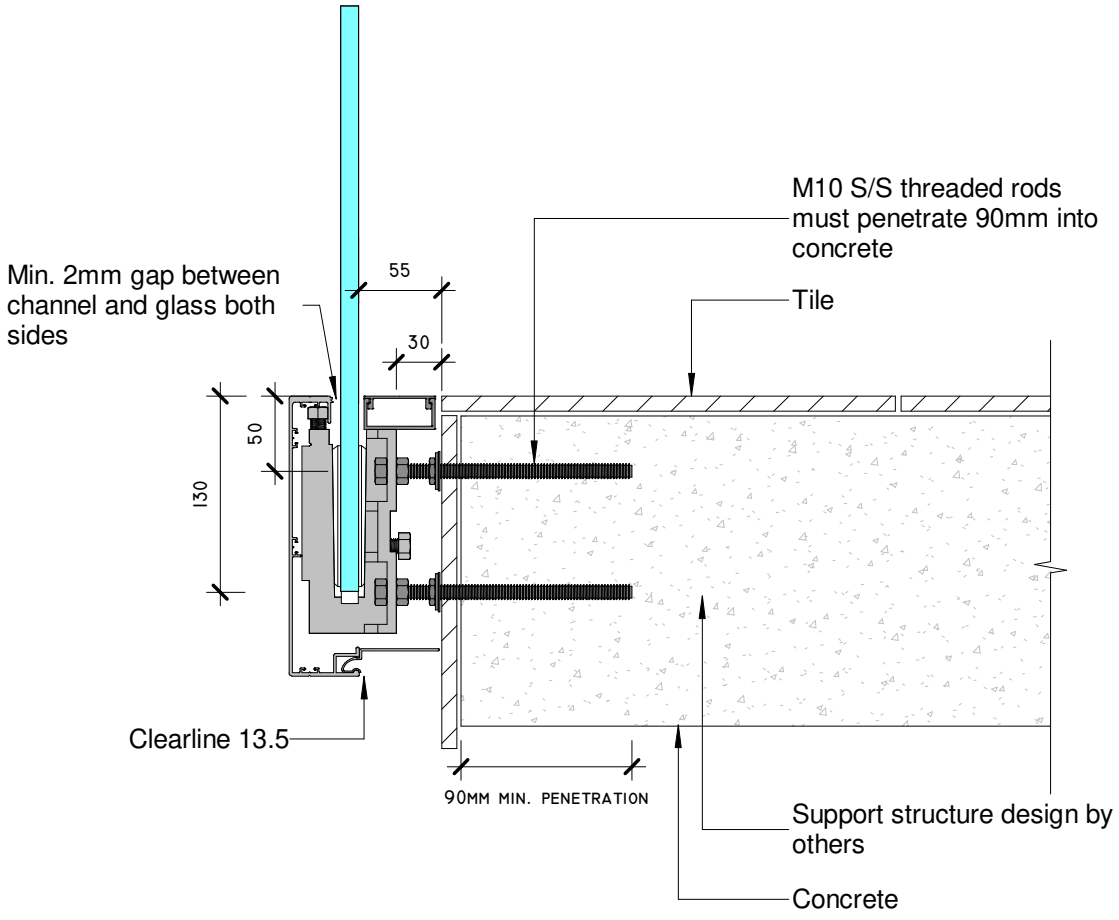


© 2019. The copyright of this document is the property of Glass Vice Limited and shall not be reproduced, copied, loaned or disposed of directly, or indirectly, nor used for any purpose other than that for which it is specifically furnished without prior consent.

gv_cad_details.rvt
All dimensions in millimetres

GLASS VICE®

# Glass Vice® Clearline®

## 13.5mm Laminated

Concrete

Date: December 2019
Scale: 1 : 5
CAD Based Details

www.glassvice.com
Phone +64 9 414 6565
info@glassvice.com

Quick Code: GV_GV13-5_1330