BRANZ Appraised
Appraisal No.510 [2013]

THERMASHELL

Specialized CONSTRUCTION PRODUCTS LTD

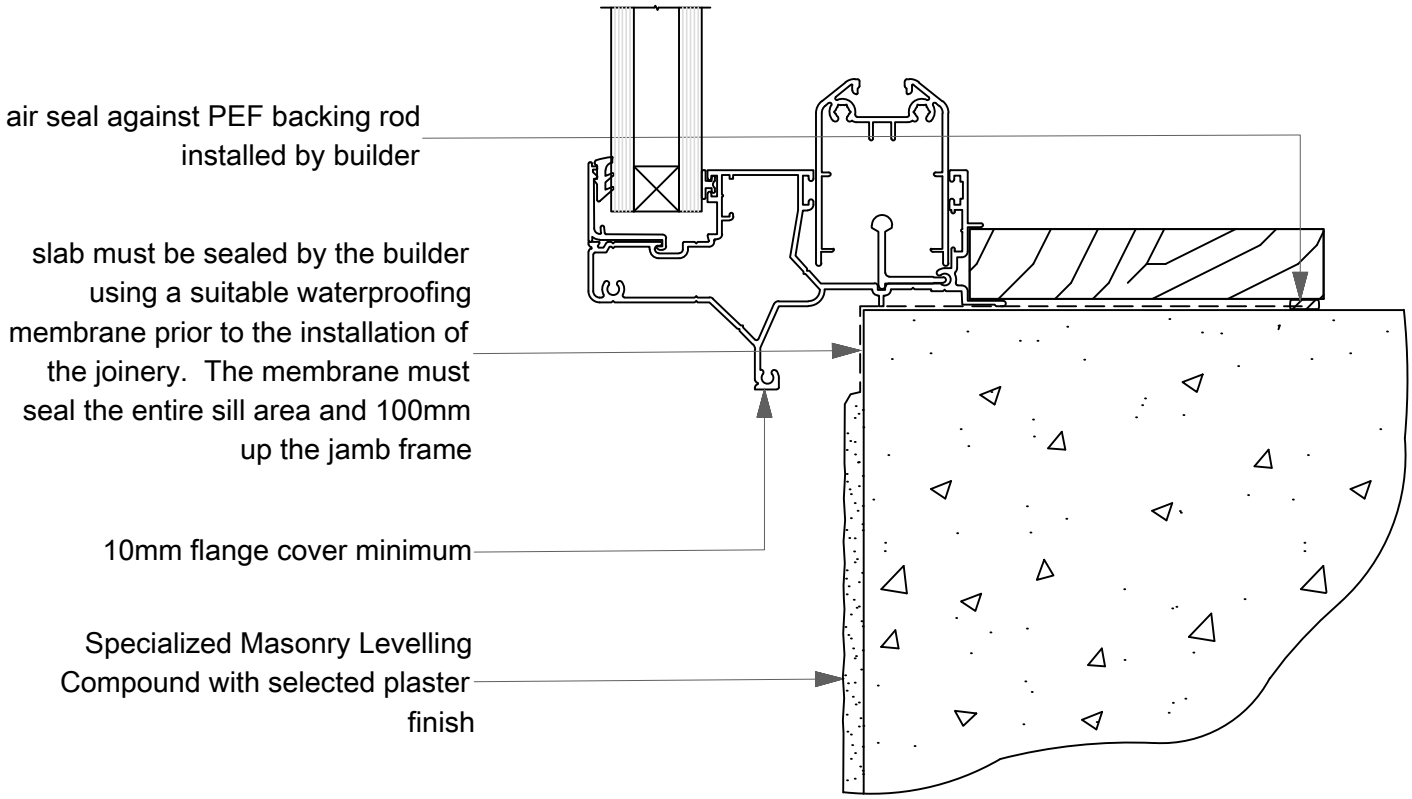

08B

SCALE: 1:2

Door Sill: CONCRETE SLAB

THERMASHELL

© copyright 2013 Specialized Construction Products Ltd

All Dimensions to be site checked before construction & installation

29/07/2014

web www.specialized.co.nz