Ventilation requirements

Contact your local service provider if ventilation is not suitable

Clearance envelope

Position the Tap and the Command Centre as close together as possible.

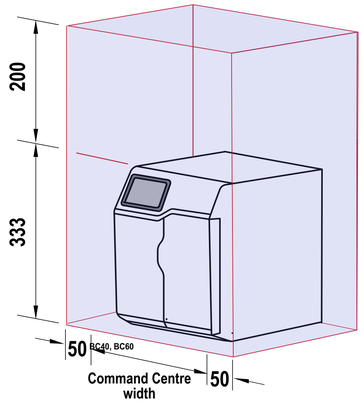

Vent tray (kit no. 93540)

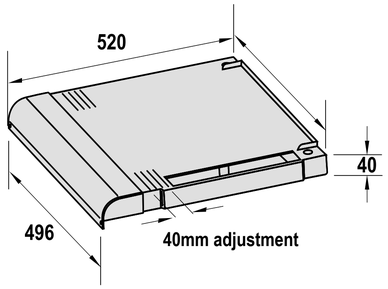

Detail A. Air inlet grille
Cut-out in cabinet floor

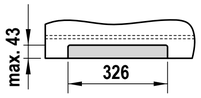

Detail B. Vent Tray air outlet
Cut-out in cabinet floor

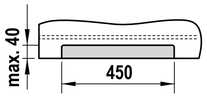

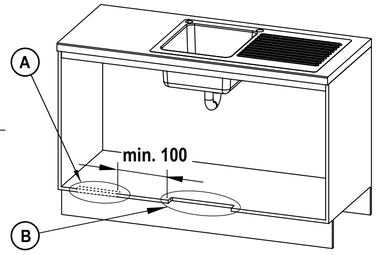

HydroTap Tap options

Classic Plus All-in-One Tap

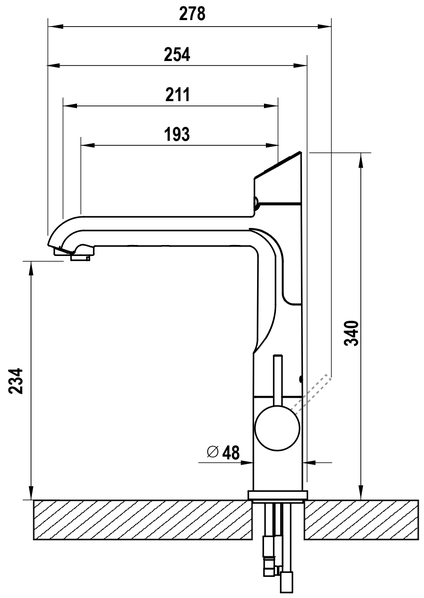

Classic All-in-One Tap

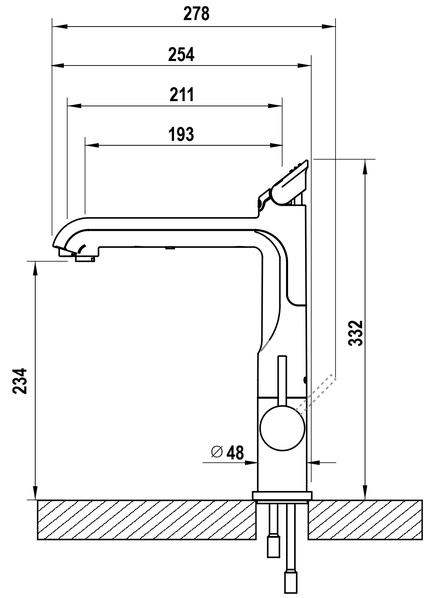

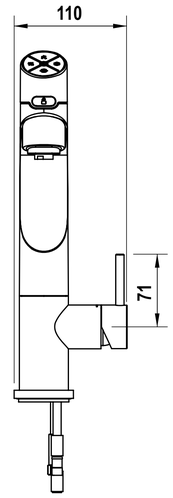

Tap Positioning

Position the Tap to dispense into the sink, allowing clearance for a cup or teapot.

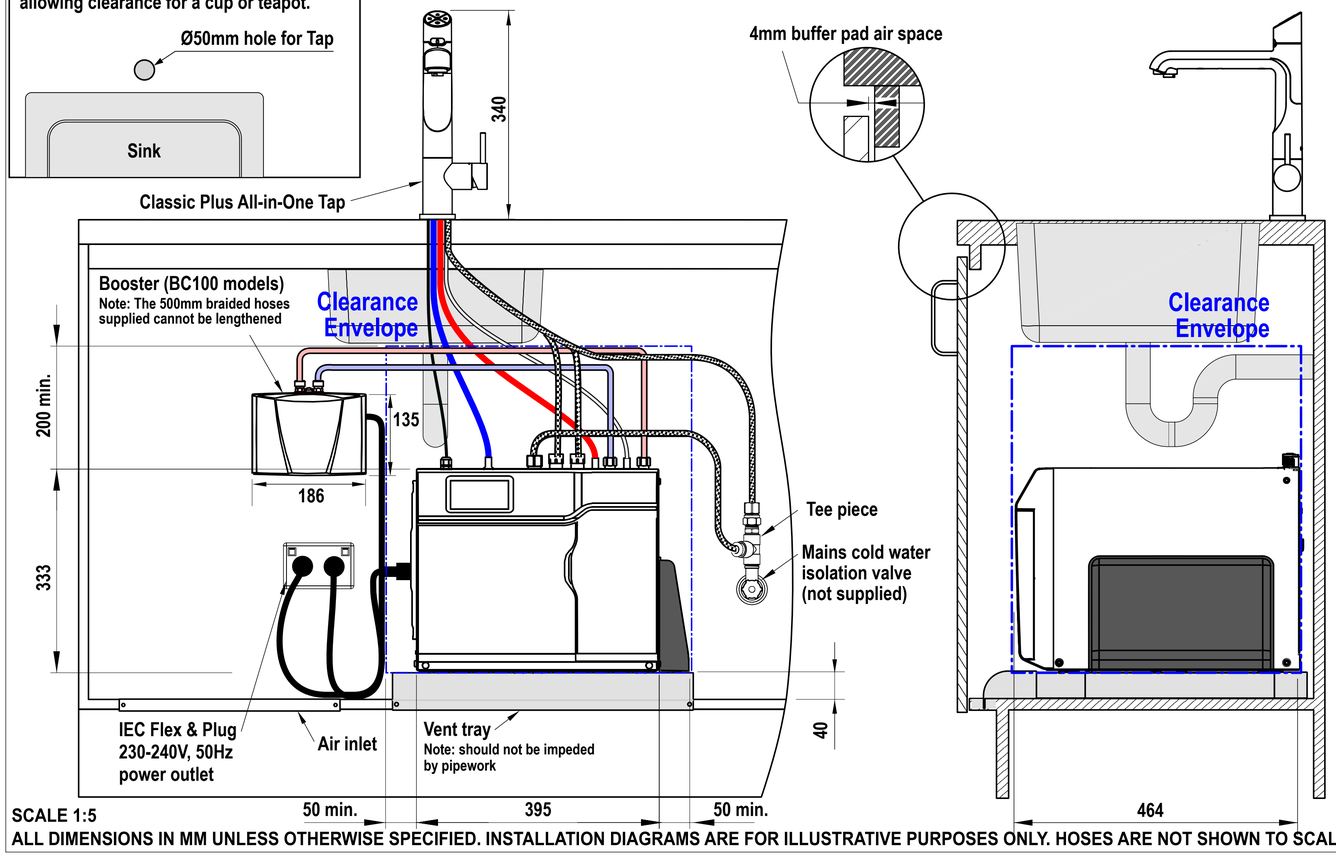

Vented mixer tap installation

Only cold water supply required

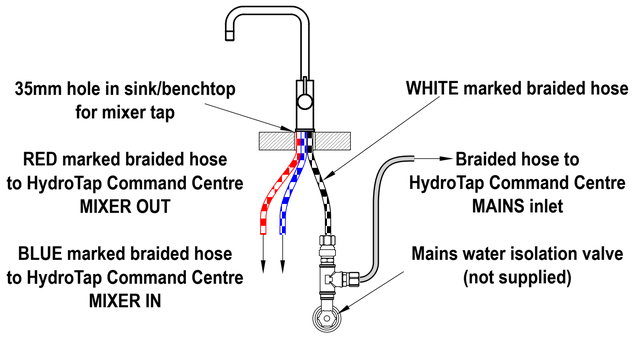

HydroTap G5
BC40 H, BC60 H, BC100 H

shown with Classic Plus All-in-One Tap (Vented)

SCALE 1:5

ALL DIMENSIONS IN MM UNLESS OTHERWISE SPECIFIED. INSTALLATION DIAGRAMS ARE FOR ILLUSTRATIVE PURPOSES ONLY. HOSES ARE NOT SHOWN TO SCALE AND CANNOT BE LENGTHENED.