METRO FRAMELESS GLASS SYSTEMS
Unit O, 35 Maurice Road, Penrose
PO Box 112 186, Penrose, Auckland 1642, New Zealand
Phone 09 622 2643 **Fax** 09 622 2648
Website www.metroframeless.co.nz

SHOWER SETOUT EXAMPLES

Shower Type: Glass to Glass Square

Overall Shower Sizes

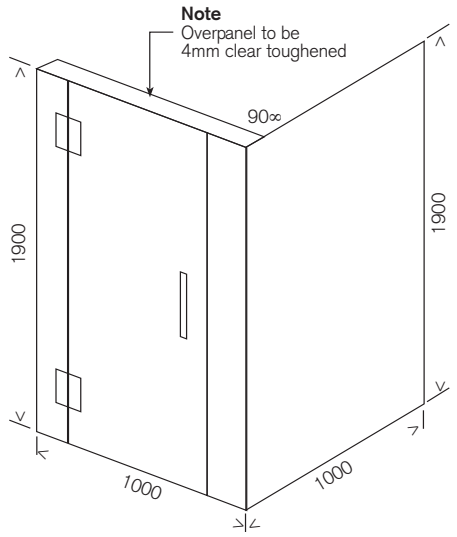

Plan View with Width Clearances

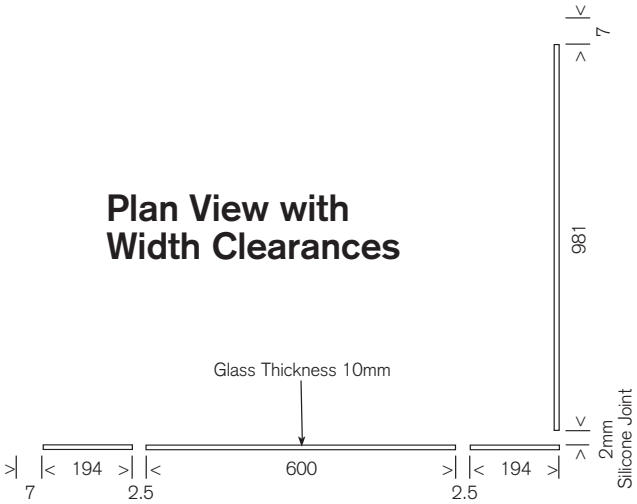

Elevation with Height Clearances

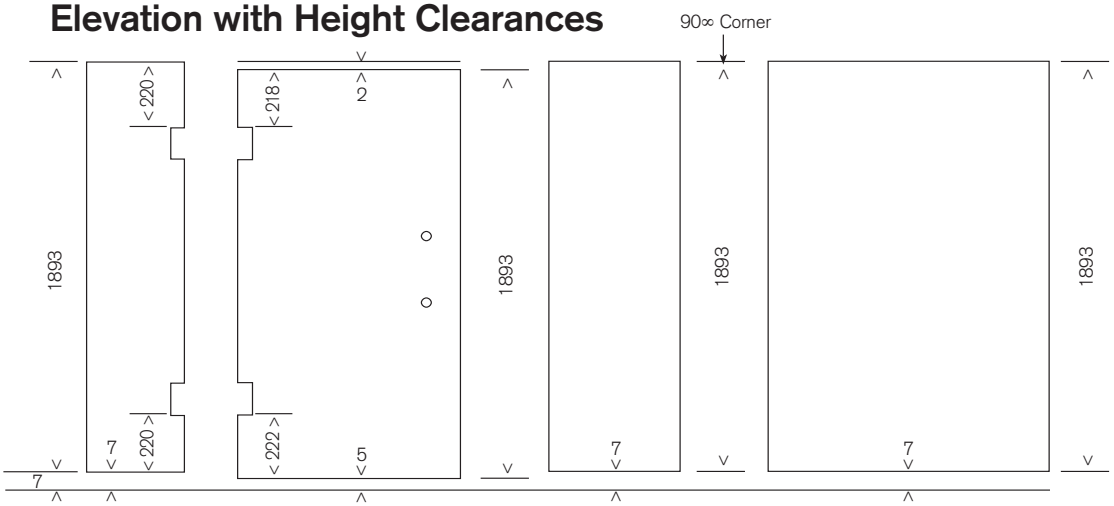

Hardware List

- 2 x MF2 Hinges
- 5.5m x CS18 Channel
- 1 x 600mm WD1 Water Deflector
- 1 x Pair Handles (customer's selection)
- 2 x CC Channel End Caps

If a water bar is to be used under the door, allow an additional 5mm clearance under door.