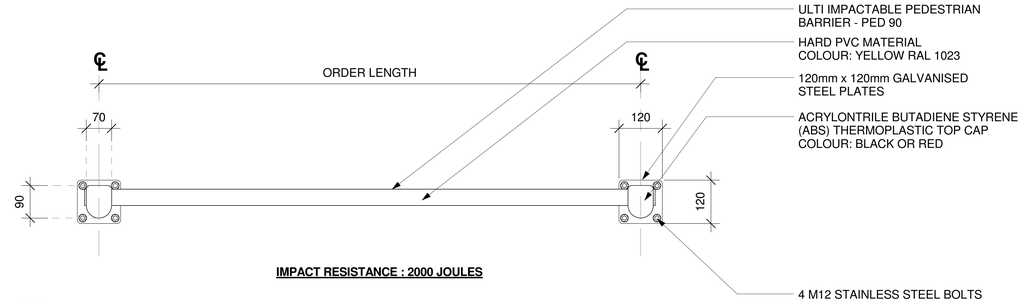

1 - **PLAN - PED 90**

SCALE: 1:6 MTS.

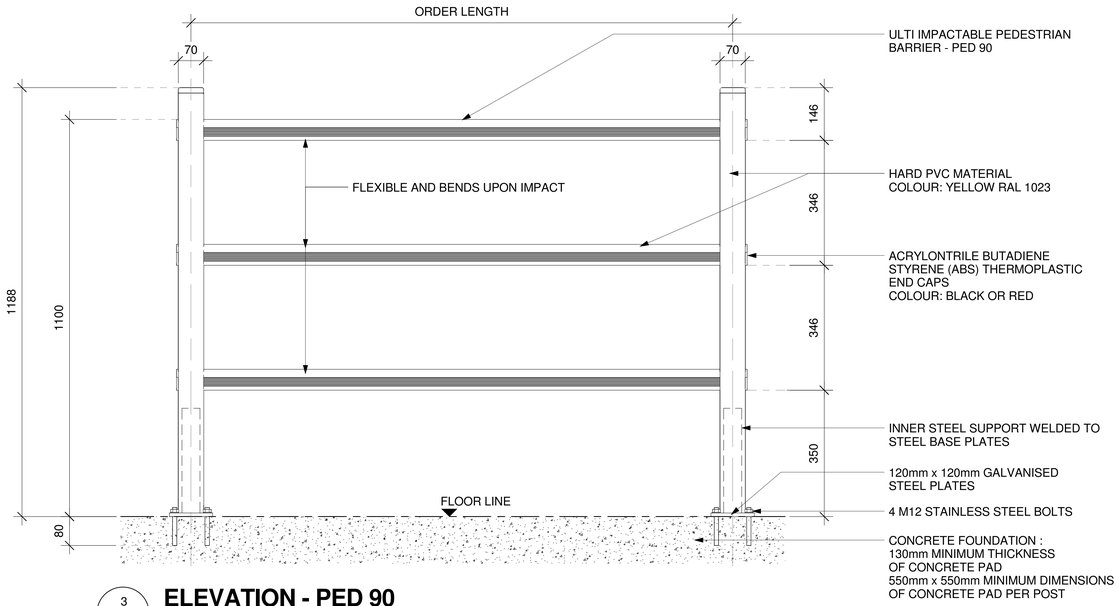

3 - **ELEVATION - PED 90**

SCALE: 1:6 MTS.

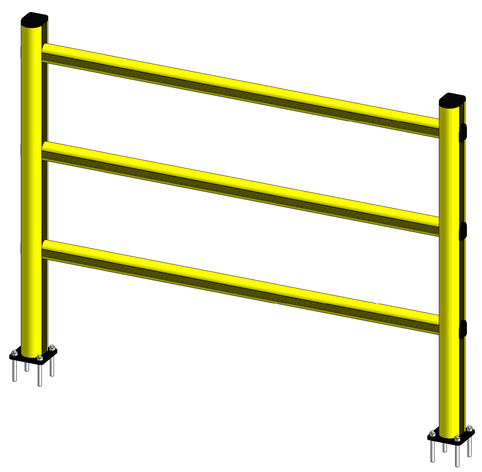

5 - **ELEVATION - PED 90**

SCALE: N.T.S.

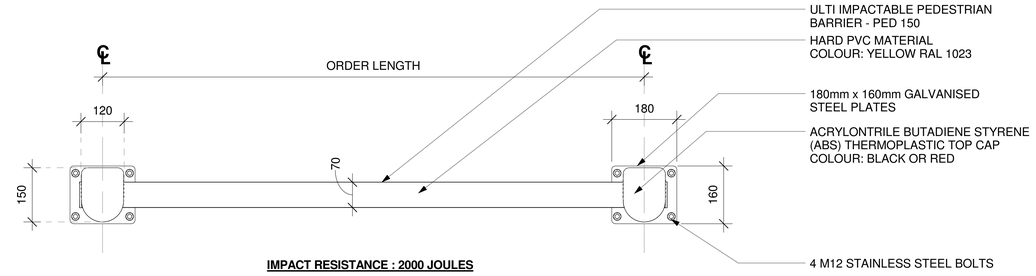

2 - **PLAN - PED 150**

SCALE: 1:6 MTS.

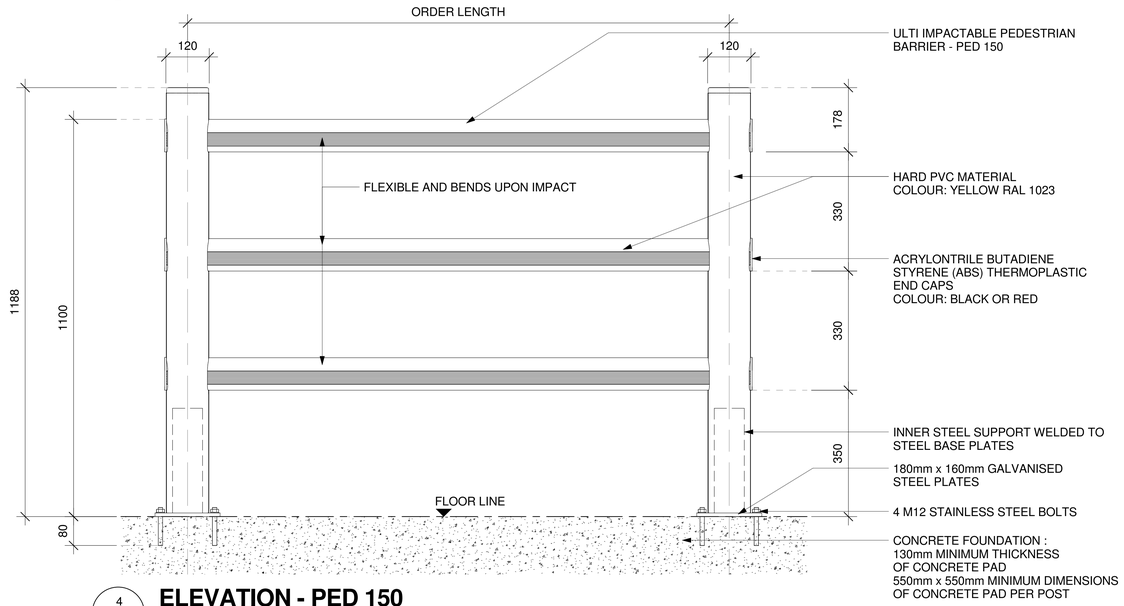

4 - **ELEVATION - PED 150**

SCALE: 1:6 MTS.

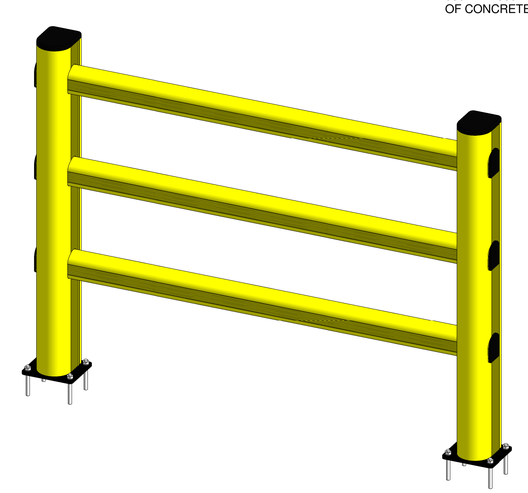

6 - **ELEVATION - PED 150**

SCALE: N.T.S.

©UltiGroup LTD, 2016

UltiGroup
SPECIALIST ACCESSWAY SOLUTIONS
www.ultigroup.co.nz
sales@ultigroup.co.nz
Phone: 0800 807 753
17 McKee Street, Te Rapa, Hamilton, 3200

Ulti Impactable Pedestrian Barrier

PED 90 & PED 150

No.	Description	Date
1	CHECKED BY TS	12.06.2016

PLAN VIEW, ELEVATION AND 3D VIEW

Project Number	-
Date	10.25.2016
Drawn By	J.ENRIQUEZ
	GUARDRAIL-BARRIER-001
Scale	As indicated

NOTE:
CONTACT ULTI GROUP FOR ANY CUSTOMISATIONS AND TO DISCUSS PROJECT SPECIFIC INFORMATION